PROPOSED 440 SQ.FT. DETACHED ACCESSORY DWELLING UNIT (ADU)

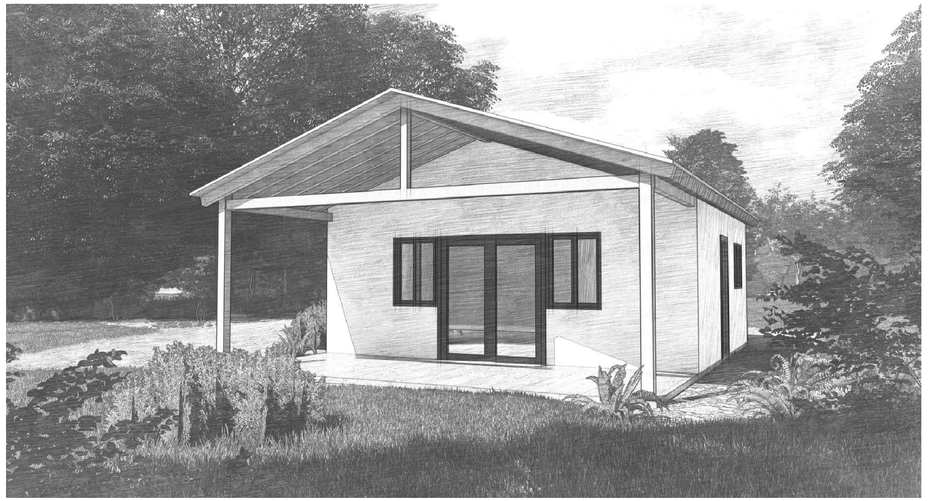

PARCEL MAP

VICINITY MAP

DESIGN LOADS

STRUCTURAL DESIGN LOADS

WIND DESIGN - BASED ON PART 1, CHAPTER 28, ASCE 7-16

STEP 1 - RISK CATEGORY: **II**
STEP 2 - BASIC WIND SPEED: **110mph**
STEP 3 - WIND LOAD PARAMETERS:

WIND DIRECTIONAL FACTOR: K_d **= 0.85**	(Table 26.6-1)
EXPOSURE CATEGORY: **C**	(Section 26.7)
TOPOGRAPHIC FACTOR: K_{zt}**= 1.0**	(Figure 26.8)
GROUND ELEVATION FACTOR: K_e **= 1.0**	(Table 26.9-1)
ENCLOSURE CLASSIFICATION, **PARTIALLY ENCLOSED** (WORST CASE)	(Section 26.12)
INTERNAL PRESSURE COEFFICIENT: GC_{pi}**= +0.55, -0.55**	(Table 26.13-1)

STEP 4 - VELOCITY EXPOSURE PRESSURE COEFFICIENT = **0.90** (h = 20') (Table 26.10-1)
STEP 5 - DETERMINE VELOCITY PRESSURE, qz, qh

$q_z, q_h = 0.00257K_zK_{zt}K_eK_dV^2$

q_z, q_h **= 23.7psf**

STEP 6 - EXTERNAL PRESSURE COEFFICIENT, GC_{pf} (Figure 28.3-1)
WALL COEFFICIENTS (WORST CASE):
SURFACE 1 = 0.53 (ACTING TOWARDS SURFACE)
SURFACE 4 = -0.43 (ACTING AWAY FROM SURFACE)
ROOF COEFFICIENTS (WORST CASE)
SURFACE 2 = -0.69 (ACTING AWAY FROM SURFACE)
SURFACE 3 = -0.48 (ACTING AWAY FROM SURFACE)
HORIZONTAL WINDWARD PRESSURE=-1.38(=-0.69/TAN 26.6^0)
HORIZONTAL LEEWARD PRESSURE = -0.96 (= -0.48/TAN 26.6^0)

RESULTS OF COMBINED INTERNAL AND EXTERNAL PRESSURE COEFFICIENTS:
WALL COEFFICIENT: GC_{pf} = 0.53, -0.43
ROOF COEFFICIENT: GC_{pf} = -1.38, -0.96

STEP 7 - DETERMINE WIND PRESSURES ACTING ON MWFRS (VERTICAL PLANE)
$p = q_h[(GC_{pf}) - (GC_{pi})]$

WALL (WINDWARD)= (23.7psf)[(0.53 -(0.55)] = 25.7psf
WALL (LEEWARD)= (23.7psf)[(-0.43 -(0.55)] = -23.3psf
ROOF (WINDWARD)= (23.7 psf)(-1.38) = -32.9psf
ROOF (LEEWARD)= (23.7 psf)(-0.96psf) = -22.8psf

SEISMIC DESIGN

SIMPLIFIED DESIGN PROCEDURE - BASED ON SECTION 12.14, ASCE 7-16

STEP 1 - USE SIMPLIFIED DESIGN PROCEDURE OUTLINED IN SECTION 12.14.8 - MOST CONSERVATIVE
STEP 2 - DETERMINE S_{DS}, THE DESIGN SPECTRAL RESPONSE ACCELERATION AT SHORT PERIODS

$S_{DS} = 2/3F_aS_s$

WHERE
F_a = 1.4 (SOIL SITE)
S_s = 1.5 (MAXIMUM)

STEP 3 - DETERMINE R, RESPONSE MODIFICATION FACTOR, TABLE 12.14-1
ITEM 13. LIGHT-FRAME (WOOD) WALLS SHEATHED WITH WOOD STRUCTURAL PANELS RATED FOR SHEAR RESISTANCE
R = 6.5
STEP 4 - DETERMINE SEISMIC BASE SHEAR, V, SECTION 12.14.8.1
$V = FS_{DS}W/R$

WHERE
F = 1.0 (ONE STORY ABOVE GRADE PLANE)
W = EFFECTIVE SEISMIC WEIGHT OF THE STRUCTURE

V = (2/3)(1.4)(1.5)W/6.5
V = 0.215W

DESIGN LOADS

ROOF DEAD LOAD		**WALL DEAD LOAD**	
ROOF COVERING	10.0 PSF	EXTERIOR WALL COVERING	10 PSF
15/32" SHEATHING	1.5	15/32" WALL SHEATHING	1.5
ROOF FRAMING	3.5	STUD WALL FRAMING	2.5
INSULATION	2.5	INTERIOR WALL COVERING	3.0
CEILING FRAMING	2.5	MISCELLANEOUS	1.0
CEILING DRYWALL	3.0	**WALL DEAD LOAD = 18 PSF**	
MISCELLANEOUS	2.0		
ROOF DEAD LOAD = 25 PSF			
ROOF LIVE LOAD = 20 PSF			

PROJECT TEAM

OWNER / APPLICANT:
Applicant to provide on Site Plan

ENGINEER OF RECORD:
TOM CAMPBELL & ASSOCIATES

GENERAL CONTRACTOR:
Applicant to provide on Site Plan

DRAFTING:
GRIT DESIGN GROUP INC.
20409 YORBA LINDA BLVD. #111
YORBA LINDA, CA 92886
(909) 493-7193

PROJECT INFORMATION

EXISTING (E) MAIN RESIDENCE
ADDRESS:
APN:
LEGAL DESCRIPTION:
ZONE:
LOT SIZE:
OCCUPANCY: R-3
TYPE OF CONSTRUCTION: V-B, NON-SPRINKLERED
HOUSE:
GARAGE:
PORCH / PATIO COVER(S):
BEDROOM(S):
BATHROOM(S):
YEAR BUILT:

PROPOSED (P) DETACHED ADU
OCCUPANCY: R-3
TYPE OF CONSTRUCTION: V-B, NON-SPRINKLERED
REQUIRED REAR YARD SETBACK: 5'
REQUIRED SIDE YARD SETBACK: 5'
MAXIMUM HEIGHT: 16'
ADU: 440 SQ.FT.
PATIO COVER: 247 SQ.FT.
BEDROOM(S): 1
BATHROOM(S): 1

FLOOR AREA RATIO
MAXIMUM FLOOR AREA RATIO: 50%

(E) LOT SIZE.....- SQ.FT.
(E) RESIDENCE.....- SQ.FT.
(P) ADU.....440 SQ.FT.
FLOOR AREA RATIO: -% - *OK!*

LOT COVERAGE
MAXIMUM LOT COVERAGE: 40%

(E) LOT SIZE.....- SQ.FT.
(E) RESIDENCE & GARAGE.....- SQ.FT.
(E) PORCH / PATIO COVER(S).....- SQ.FT.
(P) ADU.....440 SQ.FT.
(P) PATIO COVER.....- SQ.FT.
TOTAL.....- SQ.FT.
TOTAL LOT COVERAGE: -% - *OK!*

SHEET INDEX

CS-T	**TRADITIONAL STYLE PROJECT INFORMATION | SHEET INDEX**
CS-C	**CRAFTSMAN STYLE PROJECT INFORMATION | SHEET INDEX**
CS-S	**SPANISH STYLE PROJECT INFORMATION | SHEET INDEX**
SP	**SITE PLAN**
T24-1	**TITLE 24 ENERGY ANALYSIS**
T24-2	**TITLE 24 ENERGY ANALYSIS**
T24-3	**2022 RESIDENTIAL MANDATORY REQUIREMENTS**
GB-1	**GREEN BUILDING STANDARDS**
GB-2	**GREEN BUILDING STANDARDS**
A0.0	**BEST MANAGEMENT PRACTICES | APPLICATION OF GYPSUM BOARD | FIRE BLOCKING NOTES**
A1.0-T	**TRADITIONAL STYLE FLOOR PLAN | ELEVATIONS | SCHEDULES**
A1.0-C	**CRAFTSMAN STYLE FLOOR PLAN | ELEVATIONS | SCHEDULES**
A1.0-S	**SPANISH STYLE FLOOR PLAN | ELEVATIONS | SCHEDULES**
UT-1	**UNTILITY NOTES | UTILITY LAYOUT PLAN**
UT-2	**UTILITY DETAILS**
S1	**ROOF FRAMING PLAN | FOUNDATION PLAN | SECTIONS**
S2	**MINIMUM CONSTRUCTION REQUIREMENTS | GENERAL NOTES**
SD1	**STRUCTURAL DETAILS**
SD2	**ARCHITECTURAL DETAILS**
SD3	**ARCHITECTURAL DETAILS**

APPLICABLE CODES

2025 CALIFORNIA BUILDING CODE
2025 CALIFORNIA RESIDENTIAL CODE
2025 CALIFORNIA MECHANICAL CODE
2025 CALIFORNIA PLUMBING CODE
2025 CALIFORNIA ENERGY CODE
2025 CALIFORNIA GREEN BUILDING STANDARDS
CITY OF UPLAND MUNICIPAL CODE
ALL NOTES IN PLAN SHALL ALSO REFER TO 2025 CODES

PROJECT SCOPE

NEW CONSTRUCTION: CONSTRUCT NEW 440 SQ.FT. DETACHED ADU, SEPARATE UTILITES FROM MAIN RESIDENCE

SEPARATE PERMIT

2.94 KWdc MIN. PV SOLAR ARRAY ON ROOF, OPTIONAL, WHERE PERMITED PER TITLE 24 ENERGY ANALYSIS

LAMFEI LIN BUILDERS
A PROFESSIONAL CORPORATION
970-546-2387
lflbuilders.com

PROJECT
PROJECT NAME

PROJECT ADDRESS

CITY OF UPLAND CALIFORNIA

DISCLAIMER:

BY USING THESE PERMIT READY CONSTRUCTION DOCUMENTS, THE RECIPIENT ACKNOWLEDGES, ACCEPTS AND VOLUNTARILY AFFIRMS THE FOLLOWING CONDITIONS:

1. THE USE OF THIS INFORMATION IS RESTRICTED TO THE ORIGINAL PROJECT FOR WHICH IT WAS PREPARED FOR; THE PERMIT READY ACCESSORY DWELLING UNIT (ADU) PROGRAM FOR THE CITY OF UPLAND ONLY. THIS IS A LIMITED SET OF STANDARDIZED ADU PLANS AND SPECIFICATIONS APPROVED BY THE CITY OF UPLAND BUILDING DEPARTMENT. BUILDING CODES DO CHANGE OVER TIME AND THE RECIPIENT SHALL ENSURE FULL COMPLIANCE UNDER ALL CODES THEN IN EFFECT AT THE TIME OF THE SUBJECT PERMIT. THIS DOES NOT ELIMINATE OR REDUCE THE RECIPIENT'S RESPONSIBILITY TO VERIFY ANY AND ALL INFORMATION RELEVANT TO THE RECIPIENT'S WORK AND RESPONSIBILITY ON THIS PROJECT. LAMFELI LIN BUILDERS SHALL NOT BE RESPONSIBLE FOR TRANSLATION ERRORS. DO NOT USE THESE CONSTRUCTION DOCUMENTS IF THE PERMIT HAS EXPIRED OR IS REVOKED AT ALL.

2. THE RECIPIENT RECOGNIZES AND ACKNOWLEDGES THAT THE USE OF THIS INFORMATION WILL BE AT THEIR SOLE RISK AND WITHOUT ANY LIABILITY OR LEGAL EXPOSURE TO LAMFELI LIN BUILDERS. NO WARRANTIES OF ANY NATURE, WHETHER EXPRESS OR IMPLIED, SHALL BE ATTACHED TO THESE DOCUMENTS AND THE INFORMATION CONTAINED THEREON. ANY USE, REUSE, OR ALTERATION OF THESE DOCUMENTS BY THE RECIPIENT OR BY OTHERS WILL BE AT THE RECIPIENT'S RISK AND FULL LEGAL RESPONSIBILITY. FURTHERMORE, THE RECIPIENT WILL, TO THE FULLEST EXTENT PERMITTED BY LAW, DEFEND, INDEMNIFY, AND HOLD LAMFELI LIN BUILDERS AND ITS ENGINEER HARMLESS FROM ANY AND ALL CLAIMS, SUITS, LIABILITY, DEMANDS, JUDGEMENTS, OR CONDITIONS ARISING OUT OF OR RESULTING THEREFROM ANY USE OF THESE CONSTRUCTION DOCUMENTS FOR OR ON ACCOUNT OF ANY INJURY, DEATH, DAMAGE OR LOSS TO PERSONS OR PROPERTY, INDIRECT OR CONSEQUENTIAL DAMAGES IN ANY AMOUNT. THIS INDEMNITY DOES NOT APPLY TO THE SOLE NEGLIGENCE OR WILLFUL MISCONDUCT OF LAMFELI LIN BUILDERS OR ITS ENGINEER.

3. THE DESIGN REPRESENTED BY THESE PLANS ARE COPYRIGHTED AND ARE SUBJECT TO COPYRIGHT PROTECTION.

4. IF THE RECIPIENT DOES NOT AGREE WITH THE ABOVE CONDITIONS, DO NOT PROCEED WITH THE CONSTRUCTION OF AN ADU OR OTHER IMPROVEMENT UNDER THESE PLANS AT ALL.

OWNER
SCALE
PROJECT NO.
DATE

STYLE
TRADITIONAL

DESCRIPTION
PROJECT INFORMATION | SHEET INDEX | PARCEL & VICINITY MAP

SHEET
CS-T

PROPERTY OF THE CITY OF UPLAND
DO NOT COPY OR ALTER

PROPOSED 440 SQ.FT. DETACHED ACCESSORY DWELLING UNIT (ADU)

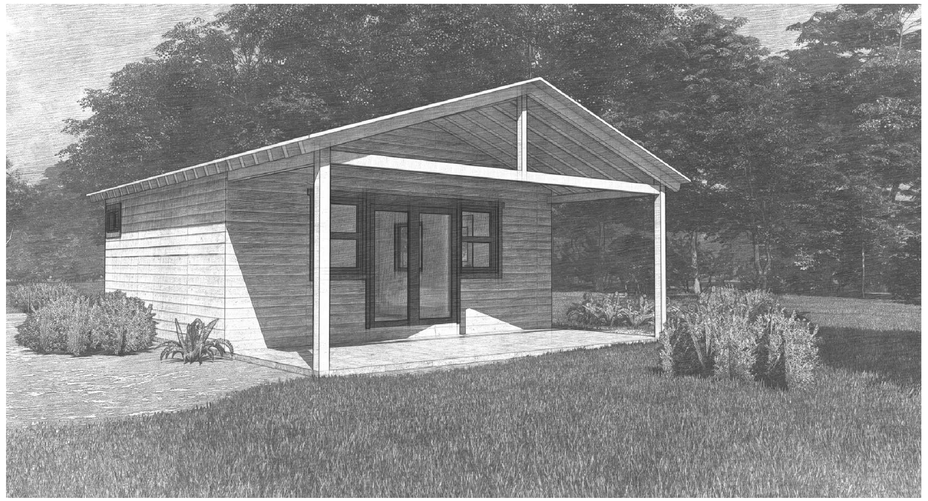

DESIGN LOADS

STRUCTURAL DESIGN LOADS

WIND DESIGN - BASED ON PART 1, CHAPTER 28, ASCE 7-16

STEP 1 - RISK CATEGORY: **II**
STEP 2 - BASIC WIND SPEED: **110mph**
STEP 3 - WIND LOAD PARAMETERS:

WIND DIRECTIONAL FACTOR: K_d **= 0.85**	(Table 26.6-1)
EXPOSURE CATEGORY: **C**	(Section 26.7)
TOPOGRAPHIC FACTOR: K_{zt}**= 1.0**	(Figure 26.8)
GROUND ELEVATION FACTOR: K_e **= 1.0**	(Table 26.9-1)
ENCLOSURE CLASSIFICATION, **PARTIALLY ENCLOSED** (WORST CASE)	(Section 26.12)
INTERNAL PRESSURE COEFFICIENT: GC_{pi}**= +0.55, -0.55**	(Table 26.13-1)

STEP 4 - VELOCITY EXPOSURE PRESSURE COEFFICIENT = **0.90** (h = 20') (Table 26.10-1)
STEP 5 - DETERMINE VELOCITY PRESSURE, qz, qh

$q_z, q_h = 0.00257K_zK_{zt}K_eK_dV^2$

q_z, q_h **= 23.7psf**

STEP 6 - EXTERNAL PRESSURE COEFFICIENT, GC_{pf} (Figure 28.3-1)
WALL COEFFICIENTS (WORST CASE):
SURFACE 1 = 0.53 (ACTING TOWARDS SURFACE)
SURFACE 4 = -0.43 (ACTING AWAY FROM SURFACE)
ROOF COEFFICIENTS (WORST CASE)
SURFACE 2 = -0.69 (ACTING AWAY FROM SURFACE)
SURFACE 3 = -0.48 (ACTING AWAY FROM SURFACE)
HORIZONTAL WINDWARD PRESSURE=-1.38(=-0.69/TAN 26.6^0)
HORIZONTAL LEEWARD PRESSURE = -0.96 (= -0.48/TAN 26.6^0)

RESULTS OF COMBINED INTERNAL AND EXTERNAL PRESSURE COEFFICIENTS:
WALL COEFFICIENT: GC_{pf} = 0.53, -0.43
ROOF COEFFICIENT: GC_{pf} = -1.38, -0.96

STEP 7 - DETERMINE WIND PRESSURES ACTING ON MWFRS (VERTICAL PLANE)
$p = q_h[(GC_{pf}) - (GC_{pi})]$

WALL (WINDWARD)= (23.7psf)[(0.53 -(0.55)] = 25.7psf
WALL (LEEWARD)= (23.7psf)[(-0.43 -(0.55)] = -23.3psf
ROOF (WINDWARD)= (23.7 psf)(-1.38) = -32.9psf
ROOF (LEEWARD)= (23.7 psf)(-0.96psf) = -22.8psf

SEISMIC DESIGN

SIMPLIFIED DESIGN PROCEDURE - BASED ON SECTION 12.14, ASCE 7-16

STEP 1 - USE SIMPLIFIED DESIGN PROCEDURE OUTLINED IN SECTION 12.14.8 - MOST CONSERVATIVE
STEP 2 - DETERMINE S_{DS}, THE DESIGN SPECTRAL RESPONSE ACCELERATION AT SHORT PERIODS

$S_{DS} = 2/3F_aS_s$

WHERE
F_a = 1.4 (SOIL SITE)
S_s = 1.5 (MAXIMUM)

STEP 3 - DETERMINE R, RESPONSE MODIFICATION FACTOR, TABLE 12.14-1
ITEM 13. LIGHT-FRAME (WOOD) WALLS SHEATHED WITH WOOD STRUCTURAL PANELS RATED FOR SHEAR RESISTANCE
R = 6.5
STEP 4 - DETERMINE SEISMIC BASE SHEAR, V, SECTION 12.14.8.1
$V = FS_{DS}W/R$

WHERE
F = 1.0 (ONE STORY ABOVE GRADE PLANE)
W = EFFECTIVE SEISMIC WEIGHT OF THE STRUCTURE

V = (2/3)(1.4)(1.5)W/6.5
V = 0.215W

DESIGN LOADS

ROOF DEAD LOAD		**WALL DEAD LOAD**	
ROOF COVERING	10.0 PSF	EXTERIOR WALL COVERING	10 PSF
15/32" SHEATHING	1.5	15/32" WALL SHEATHING	1.5
ROOF FRAMING	3.5	STUD WALL FRAMING	2.5
INSULATION	2.5	INTERIOR WALL COVERING	3.0
CEILING FRAMING	2.5	MISCELLANEOUS	1.0
CEILING DRYWALL	3.0	**WALL DEAD LOAD = 18 PSF**	
MISCELLANEOUS	2.0		
ROOF DEAD LOAD = 25 PSF			
ROOF LIVE LOAD = 20 PSF			

PROJECT TEAM

OWNER / APPLICANT:
Applicant to provide on Site Plan

ENGINEER OF RECORD:
TOM CAMPBELL & ASSOCIATES, INC.

GENERAL CONTRACTOR:
Applicant to provide on Site Plan

PROJECT INFORMATION

EXISTING (E) MAIN RESIDENCE
ADDRESS:
APN:
LEGAL DESCRIPTION:
ZONE:
LOT SIZE:
OCCUPANCY: R-3
TYPE OF CONSTRUCTION: V-B, NON-SPRINKLERED
HOUSE: -
GARAGE: -
PORCH / PATIO COVER(S): -
BEDROOM(S): -
BATHROOM(S): -
YEAR BUILT: -

PROPOSED (P) DETACHED ADU
OCCUPANCY: R-3
TYPE OF CONSTRUCTION: V-B, NON-SPRINKLERED
REQUIRED REAR YARD SETBACK: 5'
REQUIRED SIDE YARD SETBACK: 5'
MAXIMUM HEIGHT: 16'
ADU: 440 SQ.FT.
PATIO COVER: 195.96 SQ.FT.
BEDROOM(S): 1
BATHROOM(S): 1

FLOOR AREA RATIO
MAXIMUM FLOOR AREA RATIO: 50%

(E) LOT SIZE.....- SQ.FT.
(E) RESIDENCE.....- SQ.FT.
(P) ADU.....440 SQ.FT.
FLOOR AREA RATIO: -% - *OK!*

LOT COVERAGE
MAXIMUM LOT COVERAGE: 40%

(E) LOT SIZE.....- SQ.FT.
(E) RESIDENCE & GARAGE.....- SQ.FT.
(E) PORCH / PATIO COVER(S).....- SQ.FT.
(P) ADU.....440 SQ.FT.
(P) PATIO COVER.....- SQ.FT.
TOTAL.....- SQ.FT.
TOTAL LOT COVERAGE: -% - *OK!*

PARCEL MAP

VICINITY MAP

SHEET INDEX

CS-T	**TRADITIONAL STYLE PROJECT INFORMATION | SHEET INDEX**
CS-C	**CRAFTSMAN STYLE PROJECT INFORMATION | SHEET INDEX**
CS-S	**SPANISH STYLE PROJECT INFORMATION | SHEET INDEX**
SP	**SITE PLAN**
T24-1	**TITLE 24 ENERGY ANALYSIS**
T24-2	**TITLE 24 ENERGY ANALYSIS**
T24-3	**2022 RESIDENTIAL MANDATORY REQUIREMENTS**
GB-1	**GREEN BUILDING STANDARDS**
GB-2	**GREEN BUILDING STANDARDS**
A0.0	**BEST MANAGEMENT PRACTICES | APPLICATION OF GYPSUM BOARD | FIRE BLOCKING NOTES**
A1.0-T	**TRADITIONAL STYLE FLOOR PLAN | ELEVATIONS | SCHEDULES**
A1.0-C	**CRAFTSMAN STYLE FLOOR PLAN | ELEVATIONS | SCHEDULES**
A1.0-S	**SPANISH STYLE FLOOR PLAN | ELEVATIONS | SCHEDULES**
UT-1	**UNTILITY NOTES | UTILITY LAYOUT PLAN**
UT-2	**UTILITY DETAILS**
S1	**ROOF FRAMING PLAN | FOUNDATION PLAN | SECTIONS**
S2	**MINIMUM CONSTRUCTION REQUIREMENTS | GENERAL NOTES**
SD1	**STRUCTURAL DETAILS**
SD2	**ARCHITECTURAL DETAILS**
SD3	**ARCHITECTURAL DETAILS**

APPLICABLE CODES

2025 CALIFORNIA BUILDING CODE
2025 CALIFORNIA RESIDENTIAL CODE
2025 CALIFORNIA MECHANICAL CODE
2025 CALIFORNIA PLUMBING CODE
2025 CALIFORNIA ENERGY CODE
2025 CALIFORNIA GREEN BUILDING STANDARDS
CITY OF UPLAND MUNICIPAL CODE
ALL NOTES IN PLAN SHALL ALSO REFER TO 2025 CODES

PROJECT SCOPE

NEW CONSTRUCTION: CONSTRUCT NEW 440 SQ.FT. DETACHED ADU, SEPARATE UTILITES FROM MAIN RESIDENCE

SEPARATE PERMIT

2.94 KWdc MIN. PV SOLAR ARRAY ON ROOF, OPTIONAL, WHERE PERMITED PER TITLE 24 ENERGY ANALYSIS

LAMFEI LIN BUILDERS
A PROFESSIONAL CORPORATION
970-546-2387
lflbuilders.com

PROJECT
PROJECT NAME

PROJECT ADDRESS

CITY OF UPLAND
CALIFORNIA

DISCLAIMER:

BY USING THESE PERMIT READY CONSTRUCTION DOCUMENTS, THE RECIPIENT ACKNOWLEDGES, ACCEPTS AND VOLUNTARILY AFFIRMS THE FOLLOWING CONDITIONS:

1. THE USE OF THIS INFORMATION IS RESTRICTED TO THE ORIGINAL PROJECT FOR WHICH IT WAS PREPARED FOR: THE PERMIT READY ACCESSORY DWELLING UNIT (ADU) PROGRAM FOR THE CITY OF UPLAND ONLY. THIS IS A LIMITED SET OF STANDARDIZED ADU PLANS AND SPECIFICATIONS APPROVED BY THE CITY OF UPLAND BUILDING DEPARTMENT. BUILDING CODES DO CHANGE OVER TIME AND THE RECIPIENT SHALL ENSURE FULL COMPLIANCE UNDER ALL CODES THEN IN EFFECT AT THE TIME OF THE SUBJECT PERMIT. THIS DOES NOT ELIMINATE OR REDUCE THE RECIPIENT'S RESPONSIBILITY TO VERIFY ANY AND ALL INFORMATION RELEVANT TO THE RECIPIENT'S WORK AND RESPONSIBILITY ON THIS PROJECT. LAMFELI LIN BUILDERS SHALL NOT BE RESPONSIBLE FOR TRANSLATION ERRORS. DO NOT USE THESE CONSTRUCTION DOCUMENTS IF THE PERMIT HAS EXPIRED OR IS REVOKED AT ALL.

2. THE RECIPIENT RECOGNIZES AND ACKNOWLEDGES THAT THE USE OF THIS INFORMATION WILL BE AT THEIR SOLE RISK AND WITHOUT ANY LIABILITY OR LEGAL EXPOSURE TO LAMFELI LIN BUILDERS. NO WARRANTIES OF ANY NATURE, WHETHER EXPRESS OR IMPLIED, SHALL BE ATTACHED TO THESE DOCUMENTS AND THE INFORMATION CONTAINED THEREON. ANY USE, REUSE, OR ALTERATION OF THESE DOCUMENT'S BY THE RECIPIENT OR BY OTHERS WILL BE AT THE RECIPIENT'S RISK AND FULL LEGAL RESPONSIBILITY. FURTHERMORE, THE RECIPIENT WILL, TO THE FULLEST EXTENT PERMITTED BY LAW, DEFEND, INDEMNIFY, AND HOLD LAMFELI LIN BUILDERS AND ITS ENGINEER HARMLESS FROM ANY AND ALL CLAIMS, SUITS, LIABILITY, DEMANDS, JUDGEMENTS, OR CONDITIONS ARISING OUT OF OR RESULTING THEREFROM ANY USE OF THESE CONSTRUCTION DOCUMENTS FOR OR ON ACCOUNT OF ANY INJURY, DEATH, DAMAGE OR LOSS TO PERSONS OR PROPERTY, INDIRECT OR CONSEQUENTIAL DAMAGES IN ANY AMOUNT. THIS INDEMNITY DOES NOT APPLY TO THE SOLE NEGLIGENCE OR WILLFUL MISCONDUCT OF LAMFELI LIN BUILDERS OR ITS ENGINEER.

3. THE DESIGN REPRESENTED BY THESE PLANS ARE COPYRIGHTED AND ARE SUBJECT TO COPYRIGHT PROTECTION.

4. IF THE RECIPIENT DOES NOT AGREE WITH THE ABOVE CONDITIONS, DO NOT PROCEED WITH THE CONSTRUCTION OF AN ADU OR OTHER IMPROVEMENT UNDER THESE PLANS AT ALL.

OWNER
SCALE
PROJECT NO.
DATE

STYLE
CRAFTSMAN

DESCRIPTION
PROJECT INFORMATION | SHEET INDEX | PARCEL & VICINITY MAP

SHEET
CS-C

PROPERTY OF THE CITY OF UPLAND
DO NOT COPY OR ALTER

PROPOSED 440 SQ.FT. DETACHED ACCESSORY DWELLING UNIT (ADU)

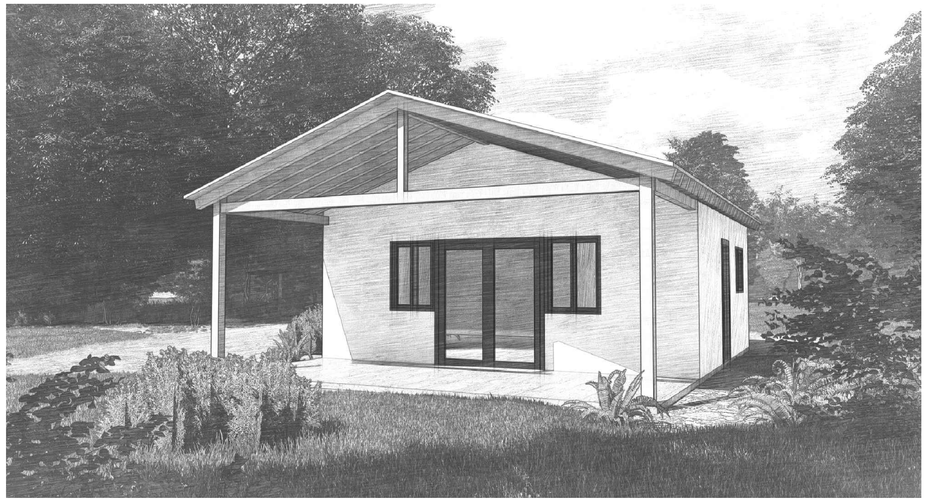

PARCEL MAP

VICINITY MAP

DESIGN LOADS

STRUCTURAL DESIGN LOADS

WIND DESIGN - BASED ON PART 1, CHAPTER 28, ASCE 7-16

STEP 1 - RISK CATEGORY: **II**
STEP 2 - BASIC WIND SPEED: **110mph**
STEP 3 - WIND LOAD PARAMETERS:
- WIND DIRECTIONAL FACTOR: **K_d = 0.85** (Table 26.6-1)
- EXPOSURE CATEGORY: **C** (Section 26.7)
- TOPOGRAPHIC FACTOR: **K_{zt}= 1.0** (Figure 26.8)
- GROUND ELEVATION FACTOR: **K_e = 1.0** (Table 26.9-1)
- ENCLOSURE CLASSIFICATION, **PARTIALLY ENCLOSED** (WORST CASE) (Section 26.12)
- INTERNAL PRESSURE COEFFICIENT: **GC_{pi}= +0.55, -0.55** (Table 26.13-1)

STEP 4 - VELOCITY EXPOSURE PRESSURE COEFFICIENT = **0.90** (h = 20') (Table 26.10-1)
STEP 5 - DETERMINE VELOCITY PRESSURE, qz, qh
- **q_z, q_h = $0.00257K_zK_{zt}K_dK_eV^2$**
- **q_z, q_h = 23.7psf**

STEP 6 - EXTERNAL PRESSURE COEFFICIENT, GC_{pf} (Figure 28.3-1)
WALL COEFFICIENTS (WORST CASE):
- SURFACE 1 = 0.53 (ACTING TOWARDS SURFACE)
- SURFACE 4 = -0.43 (ACTING AWAY FROM SURFACE)

ROOF COEFFICIENTS (WORST CASE)
- SURFACE 2 = -0.69 (ACTING AWAY FROM SURFACE)
- SURFACE 3 = -0.48 (ACTING AWAY FROM SURFACE)
- **HORIZONTAL WINDWARD PRESSURE=-1.38(=-0.69/TAN 26.6^0)**
- **HORIZONTAL LEEWARD PRESSURE = -0.96 (= -0.48/TAN 26.6^0)**

RESULTS OF COMBINED INTERNAL AND EXTERNAL PRESSURE COEFFICIENTS:
- **WALL COEFFICIENT: GC_{pf} = 0.53, -0.43**
- **ROOF COEFFICIENT: GC_{pf} = -1.38, -0.96**

STEP 7 - DETERMINE WIND PRESSURES ACTING ON MWFRS (VERTICAL PLANE)
$p = q_h[(GC_{pf}) - (GC_{pi})]$

WALL (WINDWARD)= (23.7psf)[(0.53 -(0.55)] = 25.7psf
WALL (LEEWARD)= (23.7psf)[(-0.43 -(0.55)] = -23.3psf
ROOF (WINDWARD)= (23.7 psf)(-1.38) = -32.9psf
ROOF (LEEWARD)= (23.7 psf)(-0.96psf) = -22.8psf

SEISMIC DESIGN

SIMPLIFIED DESIGN PROCEDURE - BASED ON SECTION 12.14, ASCE 7-16

STEP 1 - USE SIMPLIFIED DESIGN PROCEDURE OUTLINED IN SECTION 12.14.8 - MOST CONSERVATIVE
STEP 2 - DETERMINE S_{DS}, THE DESIGN SPECTRAL RESPONSE ACCELERATION AT SHORT PERIODS

$S_{DS}= 2/3F_aS_s$

WHERE
F_a = 1.4 (SOIL SITE)
S_s = 1.5 (MAXIMUM)

STEP 3 - DETERMINE R, RESPONSE MODIFICATION FACTOR, TABLE 12.14-1
ITEM 13. LIGHT-FRAME (WOOD) WALLS SHEATHED WITH WOOD STRUCTURAL PANELS RATED FOR SHEAR RESISTANCE
R = 6.5
STEP 4 - DETERMINE SEISMIC BASE SHEAR, V, SECTION 12.14.8.1
$V = FS_{DS}W/R$

WHERE
F = 1.0 (ONE STORY ABOVE GRADE PLANE)
W = EFFECTIVE SEISMIC WEIGHT OF THE STRUCTURE

V = (2/3)(1.4)(1.5)W/6.5
V = 0.215W

DESIGN LOADS

ROOF DEAD LOAD		**WALL DEAD LOAD**	
ROOF COVERING	10.0 PSF	EXTERIOR WALL COVERING	10 PSF
15/32" SHEATHING	1.5	15/32" WALL SHEATHING	1.5
ROOF FRAMING	3.5	STUD WALL FRAMING	2.5
INSULATION	2.5	INTERIOR WALL COVERING	3.0
CEILING FRAMING	2.5	MISCELLANEOUS	1.0
CEILING DRYWALL	3.0	**WALL DEAD LOAD = 18 PSF**	
MISCELLANEOUS	2.0		
ROOF DEAD LOAD = 25 PSF			
ROOF LIVE LOAD = 20 PSF			

PROJECT TEAM

OWNER / APPLICANT:
Applicant to provide on Site Plan

ENGINEER OF RECORD:
TOM CAMPBELL & ASSOCIATES, INC.

GENERAL CONTRACTOR:
Applicant to provide on Site Plan

PROJECT INFORMATION

EXISTING (E) MAIN RESIDENCE
ADDRESS:
APN:
LEGAL DESCRIPTION:
ZONE:
LOT SIZE:
OCCUPANCY: R-3
TYPE OF CONSTRUCTION: V-B, NON-SPRINKLERED
HOUSE: -
GARAGE: -
PORCH / PATIO COVER(S): -
BEDROOM(S): -
BATHROOM(S): -
YEAR BUILT: -

PROPOSED (P) DETACHED ADU
OCCUPANCY: R-3
TYPE OF CONSTRUCTION: V-B, NON-SPRINKLERED
REQUIRED REAR YARD SETBACK: 5'
REQUIRED SIDE YARD SETBACK: 5'
MAXIMUM HEIGHT: 16'
ADU: 440 SQ.FT.
PATIO COVER: 195.96 SQ.FT.
BEDROOM(S): 1
BATHROOM(S): 1

FLOOR AREA RATIO
MAXIMUM FLOOR AREA RATIO: 50%

(E) LOT SIZE.....- SQ.FT.
(E) RESIDENCE.....- SQ.FT.
(P) ADU.....440 SQ.FT.
FLOOR AREA RATIO: -% - *OK!*

LOT COVERAGE
MAXIMUM LOT COVERAGE: 40%

(E) LOT SIZE.....- SQ.FT.
(E) RESIDENCE & GARAGE.....- SQ.FT.
(E) PORCH / PATIO COVER(S).....- SQ.FT.
(P) ADU.....440 SQ.FT.
(P) PATIO COVER.....- SQ.FT.
TOTAL.....- SQ.FT.
TOTAL LOT COVERAGE: -% - *OK!*

SHEET INDEX

CS-T	**TRADITIONAL STYLE PROJECT INFORMATION | SHEET INDEX**
CS-C	**CRAFTSMAN STYLE PROJECT INFORMATION | SHEET INDEX**
CS-S	**SPANISH STYLE PROJECT INFORMATION | SHEET INDEX**
SP	**SITE PLAN**
T24-1	**TITLE 24 ENERGY ANALYSIS**
T24-2	**TITLE 24 ENERGY ANALYSIS**
T24-3	**2022 RESIDENTIAL MANDATORY REQUIREMENTS**
GB-1	**GREEN BUILDING STANDARDS**
GB-2	**GREEN BUILDING STANDARDS**
A0.0	**BEST MANAGEMENT PRACTICES | APPLICATION OF GYPSUM BOARD | FIRE BLOCKING NOTES**
A1.0-T	**TRADITIONAL STYLE FLOOR PLAN | ELEVATIONS | SCHEDULES**
A1.0-C	**CRAFTSMAN STYLE FLOOR PLAN | ELEVATIONS | SCHEDULES**
A1.0-S	**SPANISH STYLE FLOOR PLAN | ELEVATIONS | SCHEDULES**
UT-1	**UNTILITY NOTES | UTILITY LAYOUT PLAN**
UT-2	**UTILITY DETAILS**
S1	**ROOF FRAMING PLAN | FOUNDATION PLAN | SECTIONS**
S2	**MINIMUM CONSTRUCTION REQUIREMENTS | GENERAL NOTES**
SD1	**STRUCTURAL DETAILS**
SD2	**ARCHITECTURAL DETAILS**
SD3	**ARCHITECTURAL DETAILS**

APPLICABLE CODES

2025 CALIFORNIA BUILDING CODE
2025 CALIFORNIA RESIDENTIAL CODE
2025 CALIFORNIA MECHANICAL CODE
2025 CALIFORNIA PLUMBING CODE
2025 CALIFORNIA ENERGY CODE
2025 CALIFORNIA GREEN BUILDING STANDARDS
CITY OF UPLAND MUNICIPAL CODE
ALL NOTES IN PLAN SHALL ALSO REFER TO 2025 CODES

PROJECT SCOPE

NEW CONSTRUCTION: CONSTRUCT NEW 440 SQ.FT. DETACHED ADU, SEPARATE UTILITES FROM MAIN RESIDENCE

SEPARATE PERMIT

2.94 KWdc MIN. PV SOLAR ARRAY ON ROOF, OPTIONAL, WHERE PERMITED PER TITLE 24 ENERGY ANALYSIS

LAMFEI LIN BUILDERS
A PROFESSIONAL CORPORATION
970-546-2387
lflbuilders.com

PROJECT
PROJECT NAME

PROJECT ADDRESS

CITY OF UPLAND CALIFORNIA

DISCLAIMER:
DISCLAIMER:

BY USING THESE PERMIT READY CONSTRUCTION DOCUMENTS, THE RECIPIENT ACKNOWLEDGES, ACCEPTS AND VOLUNTARILY AFFIRMS THE FOLLOWING CONDITIONS:

1. THE USE OF THIS INFORMATION IS RESTRICTED TO THE ORIGINAL PROJECT FOR WHICH IT WAS PREPARED FOR; THE PERMIT READY ACCESSORY DWELLING UNIT (ADU) PROGRAM FOR THE CITY OF UPLAND ONLY. THIS IS A LIMITED SET OF STANDARDIZED ADU PLANS AND SPECIFICATIONS APPROVED BY THE CITY OF UPLAND BUILDING DEPARTMENT. BUILDING CODES DO CHANGE OVER TIME AND THE RECIPIENT SHALL ENSURE FULL COMPLIANCE UNDER ALL CODES THEN IN EFFECT AT THE TIME OF THE SUBJECT PERMIT. THIS DOES NOT ELIMINATE OR REDUCE THE RECIPIENT'S RESPONSIBILITY TO VERIFY ANY AND ALL INFORMATION RELEVANT TO THE RECIPIENT'S WORK AND RESPONSIBILITY ON THIS PROJECT. LAMFELI LIN BUILDERS SHALL NOT BE RESPONSIBLE FOR TRANSLATION ERRORS. DO NOT USE THESE CONSTRUCTION DOCUMENTS IF THE PERMIT HAS EXPIRED OR IS REVOKED AT ALL.

2. THE RECIPIENT RECOGNIZES AND ACKNOWLEDGES THAT THE USE OF THIS INFORMATION WILL BE AT THEIR SOLE RISK AND WITHOUT ANY LIABILITY OR LEGAL EXPOSURE TO LAMFELI LIN BUILDERS. NO WARRANTIES OF ANY NATURE, WHETHER EXPRESS OR IMPLIED, SHALL BE ATTACHED TO THESE DOCUMENTS AND THE INFORMATION CONTAINED THEREON. ANY USE, REUSE, OR ALTERATION OF THESE DOCUMENTS BY THE RECIPIENT OR BY OTHERS WILL BE AT THE RECIPIENT'S RISK AND FULL LEGAL RESPONSIBILITY. FURTHERMORE, THE RECIPIENT WILL, TO THE FULLEST EXTENT PERMITTED BY LAW, DEFEND, INDEMNIFY, AND HOLD LAMFELI LIN BUILDERS AND ITS ENGINEER HARMLESS FROM ANY AND ALL CLAIMS, SUITS, LIABILITY, DEMANDS, JUDGEMENTS, OR CONDITIONS ARISING OUT OF OR RESULTING THEREFROM ANY USE OF THESE CONSTRUCTION DOCUMENTS FOR OR ON ACCOUNT OF ANY INJURY, DEATH, DAMAGE OR LOSS TO PERSONS OR PROPERTY, INDIRECT OR CONSEQUENTIAL DAMAGES IN ANY AMOUNT. THIS INDEMNITY DOES NOT APPLY TO THE SOLE NEGLIGENCE OR WILLFUL MISCONDUCT OF LAMFELI LIN BUILDERS OR ITS ENGINEER.

3. THE DESIGN REPRESENTED BY THESE PLANS ARE COPYRIGHTED AND ARE SUBJECT TO COPYRIGHT PROTECTION.

4. IF THE RECIPIENT DOES NOT AGREE WITH THE ABOVE CONDITIONS, DO NOT PROCEED WITH THE CONSTRUCTION OF AN ADU OR OTHER IMPROVEMENT UNDER THESE PLANS AT ALL.

OWNER
SCALE
PROJECT NO.
DATE

STYLE
SPANISH

DESCRIPTION
PROJECT INFORMATION | SHEET INDEX | PARCEL & VICINITY MAP

SHEET
CS-S

PROPERTY OF THE CITY OF UPLAND
DO NOT COPY OR ALTER

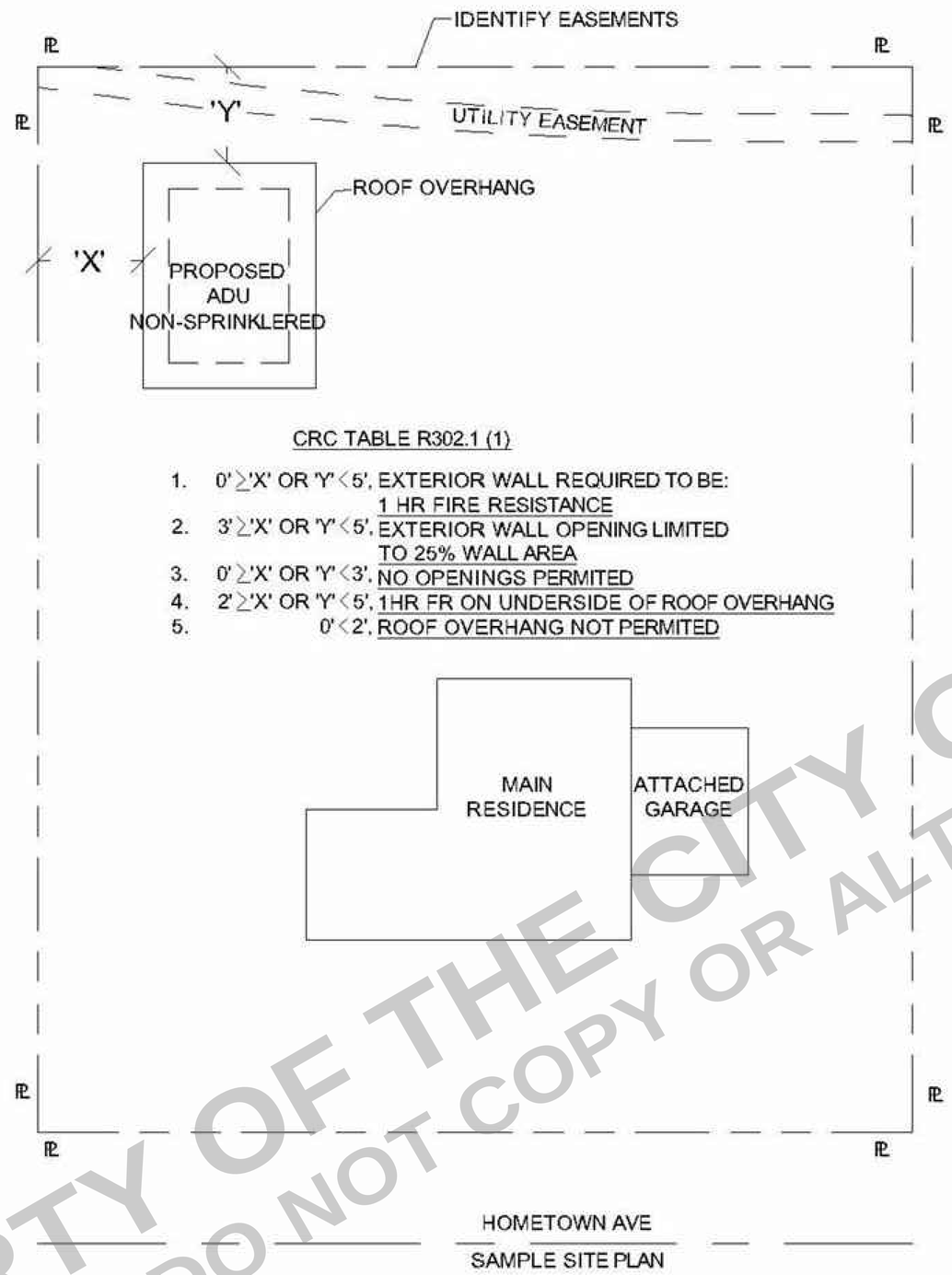

SAMPLE SITE PLAN

PROPERTY OF THE CITY OF UPLAND
DO NOT COPY OR ALTER

LAMFEI LIN BUILDERS
A PROFESSIONAL CORPORATION
970-546-2387
lflbuilders.com

PROJECT
PROJECT NAME

PROJECT ADDRESS

CITY OF UPLAND
CALIFORNIA

DISCLAIMER:

BY USING THESE PERMIT READY CONSTRUCTION DOCUMENTS, THE RECIPIENT ACKNOWLEDGES, ACCEPTS AND VOLUNTARILY AFFIRMS THE FOLLOWING CONDITIONS:

1. THE USE OF THIS INFORMATION IS RESTRICTED TO THE ORIGINAL PROJECT FOR WHICH IT WAS PREPARED FOR; THE PERMIT READY ACCESSORY DWELLING UNIT (ADU) PROGRAM FOR THE CITY OF UPLAND ONLY. THIS IS A LIMITED SET OF STANDARDIZED ADU PLANS AND SPECIFICATIONS APPROVED BY THE CITY OF UPLAND BUILDING DEPARTMENT. BUILDING CODES DO CHANGE OVER TIME AND THE RECIPIENT SHALL ENSURE FULL COMPLIANCE UNDER ALL CODES THEN IN EFFECT AT THE TIME OF THE SUBJECT PERMIT. THIS DOES NOT ELIMINATE OR REDUCE THE RECIPIENT'S RESPONSIBILITY TO VERIFY ANY AND ALL INFORMATION RELEVANT TO THE RECIPIENT'S WORK AND RESPONSIBILITY ON THIS PROJECT. LAMFELI LIN BUILDERS SHALL NOT BE RESPONSIBLE FOR TRANSLATION ERRORS. DO NOT USE THESE CONSTRUCTION DOCUMENTS IF THE PERMIT HAS EXPIRED OR IS REVOKED AT ALL.

2. THE RECIPIENT RECOGNIZES AND ACKNOWLEDGES THAT THE USE OF THIS INFORMATION WILL BE AT THEIR SOLE RISK AND WITHOUT ANY LIABILITY OR LEGAL EXPOSURE TO LAMFELI LIN BUILDERS. NO WARRANTIES OF ANY NATURE, WHETHER EXPRESS OR IMPLIED, SHALL BE ATTACHED TO THESE DOCUMENTS AND THE INFORMATION CONTAINED THEREON. ANY USE, REUSE, OR ALTERATION OF THESE DOCUMENTS BY THE RECIPIENT OR BY OTHERS WILL BE AT THE RECIPIENT'S RISK AND FULL LEGAL RESPONSIBILITY. FURTHERMORE, THE RECIPIENT WILL, TO THE FULLEST EXTENT PERMITTED BY LAW, DEFEND, INDEMNIFY, AND HOLD LAMFELI LIN BUILDERS AND ITS ENGINEER HARMLESS FROM ANY AND ALL CLAIMS, SUITS, LIABILITY, DEMANDS, JUDGEMENTS, OR CONDITIONS ARISING OUT OF OR RESULTING THEREFROM ANY USE OF THESE CONSTRUCTION DOCUMENTS FOR OR ON ACCOUNT OF ANY INJURY, DEATH, DAMAGE OR LOSS TO PERSONS OR PROPERTY, INDIRECT OR CONSEQUENTIAL DAMAGES IN ANY AMOUNT. THIS INDEMNITY DOES NOT APPLY TO THE SOLE NEGLIGENCE OR WILLFUL MISCONDUCT OF LAMFELI LIN BUILDERS OR ITS ENGINEER.

3. THE DESIGN REPRESENTED BY THESE PLANS ARE COPYRIGHTED AND ARE SUBJECT TO COPYRIGHT PROTECTION.

4. IF THE RECIPIENT DOES NOT AGREE WITH THE ABOVE CONDITIONS, DO NOT PROCEED WITH THE CONSTRUCTION OF AN ADU OR OTHER IMPROVEMENT UNDER THESE PLANS AT ALL.

OWNER
SCALE
PROJECT NO.
DATE

STYLE

DESCRIPTION
SITE PLAN

SHEET
SP

CERTIFICATE OF COMPLIANCE - RESIDENTIAL PERFORMANCE COMPLIANCE METHOD **CF1R-PRF-01-E**

Project Name: 440 SQFT ADU **Calculation Date/Time:** 2025-01-29T12:04:24-08:00 **(Page 1 of 10)**

Calculation Description: Title 24 Analysis **Input File Name:** 440 SQFT ADU.ribd22x

GENERAL INFORMATION

01	Project Name	440 SQFT ADU		
02	Run Title	Title 24 Analysis		
03	Project Location	_		
04	City		05	Standards Version: 2022
06	Zip code		07	Software Version: EnergyPro 9.3
08	Climate Zone	10	09	Front Orientation (deg/ Cardinal): 0
10	Building Type	Single family	11	Number of Dwelling Units: 1
12	Project Scope	Newly Constructed	13	Number of Bedrooms: 1
14	Addition Cond. Floor Area (ft^2)	0	15	Number of Stories: 1
16	Existing Cond. Floor Area (ft^2)	n/a	17	Fenestration Average U-factor: 0.42
18	Total Cond. Floor Area (ft^2)	440	19	Glazing Percentage (%): 12.84%
20	ADU Bedroom Count	n/a	21	ADU Conditioned Floor Area: n/a
22	Fuel Type	All electric	23	No Dwelling Unit: No

COMPLIANCE RESULTS

01	Building Complies with Computer Performance
02	This building incorporates features that require field testing and/or verification by a certified HERS rater under the supervision of a CEC-approved HERS provider.
03	This building incorporates one or more Special Features shown below

NOTICE: This document has been generated by California Home Energy Efficiency Rating Services (CHEERS) using information uploaded by third parties not affiliated with or related to CHEERS. Therefore, CHEERS is not responsible for, and cannot guarantee, the accuracy or completeness of the information contained in this document.

ENERGY DESIGN RATINGS

	Energy Design Ratings			Compliance Margins		
	Source Energy (EDR1)	Efficiency[1] EDR (EDR2efficiency)	Total[2] EDR (EDR2total)	Source Energy (EDR1)	Efficiency[1] EDR (EDR2efficiency)	Total[2] EDR (EDR2total)
Standard Design	37.7	40.9	56.8			
Proposed Design	37.2	38.5	55.3	0.5	2.4	1.5

RESULT[3]: PASS

[1]Efficiency EDR includes improvements like a better building envelope and more efficient equipment
[2]Total EDR includes efficiency and demand response measures such as photovoltaic (PV) system and batteries
[3]Building complies when source energy, efficiency and total compliance margins are greater than or equal to zero and unmet load hour limits are not exceeded

- Standard Design PV Capacity: 0.00 kWdc

NOTICE: This document has been generated by California Home Energy Efficiency Rating Services (CHEERS) using information uploaded by third parties not affiliated with or related to CHEERS. Therefore, CHEERS is not responsible for, and cannot guarantee, the accuracy or completeness of the information contained in this document.

ENERGY USE SUMMARY

Energy Use	Standard Design Source Energy (EDR1) (kBtu/ft^2 -yr)	Standard Design TDV Energy (EDR2) (kTDV/ft^2 -yr)	Proposed Design Source Energy (EDR1) (kBtu/ft^2 -yr)	Proposed Design TDV Energy (EDR2) (kTDV/ft^2 -yr)	Margin (EDR1)	Margin (EDR2)
Space Heating	0.67	3.17	2.69	19.87	-2.02	-16.7
Space Cooling	2.19	43.19	1.34	32.38	0.85	10.81
IAQ Ventilation	0.49	5.18	0.49	5.18	0	0
Water Heating	4.16	42.26	2.78	30.79	1.38	11.47
Self Utilization/Flexibility Credit			0	0	0	0
Efficiency Compliance Total	**7.51**	**93.8**	**7.3**	**88.22**	**0.21**	**5.58**
Photovoltaics	0	0	0	0		
Battery			0	0		
Flexibility			0			
Indoor Lighting	1.25	12.11	1.25	12.11		
Appl. & Cooking	4.47	50.84	4.37	49.82		
Plug Loads	8.21	83.92	8.21	83.92		
Outdoor Lighting	0.23	2.1	0.23	2.1		
TOTAL COMPLIANCE	**21.67**	**242.77**	**21.36**	**236.17**		

NOTICE: This document has been generated by California Home Energy Efficiency Rating Services (CHEERS) using information uploaded by third parties not affiliated with or related to CHEERS. Therefore, CHEERS is not responsible for, and cannot guarantee, the accuracy or completeness of the information contained in this document.

WHEN USING THE INCLUDED ENERGY REPORT WITH THIS PERMIT READY CONSTRUCTION DOCUMENT, CONTACT TITLE 24 EXPERTS AT INFOR@TITLE24EXPERTS.COM AND REQUEST A SITE-SPECIFIC ENERGY REPORT FOR YOUR PERMIT APPLICATION.

ENERGY USE INTENSITY

	Standard Design (kBtu/ft^2 - yr)	Proposed Design (kBtu/ft^2 - yr)	Margin (kBtu/ft^2 - yr)	Margin Percentage
Gross EUI[1]	28.85	27.44	1.41	4.89
Net EUI[2]	28.85	27.44	1.41	4.89

Notes
1. Gross EUI is Energy Use Total (not including PV) / Total Building Area.
2. Net EUI is Energy Use Total (including PV) / Total Building Area.

REQUIRED PV SYSTEMS

01	02	03	04	05	06	07	08	09	10	11	12
DC System Size (kWdc)	Exception	Module Type	Array Type	Power Electronics	CFI	Azimuth (deg)	Tilt Input	Array Angle (deg)	Tilt: (x in 12)	Inverter Eff. (%)	Annual Solar Access (%)
0	No PV - required PV less than 1.8kWdc	Standard (14-17%)	Fixed	none	true	n/a	n/a	n/a	n/a	n/a	

REQUIRED SPECIAL FEATURES

The following are features that must be installed as condition for meeting the modeled energy performance for this computer analysis.

- PV exception 2: No PV required when minimum PV size (Section 150.1c)14) < 1.8 kWdc (0 kW)
- Variable capacity heat pump compliance option (verification details from VCHP Staff report, Appendix B, and RA3)
- Northwest Energy Efficiency Alliance (NEEA) rated heat pump water heater; specific brand/model, or equivalent, must be installed

NOTICE: This document has been generated by California Home Energy Efficiency Rating Services (CHEERS) using information uploaded by third parties not affiliated with or related to CHEERS. Therefore, CHEERS is not responsible for, and cannot guarantee, the accuracy or completeness of the information contained in this document.

HERS FEATURE SUMMARY

The following is a summary of the features that must be field-verified by a certified HERS Rater as a condition for meeting the modeled energy performance for this computer analysis. Additional detail is provided in the building tables below. Registered CF2Rs ard CF3Rs are required to be completed in the HERS Registry

- Quality insulation installation (QII)
- Indoor air quality ventilation
- Kitchen range hood
- Verified EER/EER2
- Verified SEER/SEER2
- Verified Refrigerant Charge
- Airflow in habitable rooms (SC3.1.4.1.7)
- Verified HSPF2
- Verified heat pump rated heating capacity
- Wall-mounted thermostat in zones greater than 150 ft2 (SC3.4.5)
- Ductless indoor units located entirely in conditioned space (SC3.1.4.1.8)

BUILDING - FEATURES INFORMATION

01	02	03	04	05	06	07
Project Name	Conditioned Floor Area (ft^2)	Number of Dwelling Units	Number of Bedrooms	Number of Zones	Number of Ventilation Cooling Systems	Number of Water Heating Systems
440 SQFT ADU	440	1	1	1	0	1

ZONE INFORMATION

01	02	03	04	05	06	07
Zone Name	Zone Type	HVAC System Name	Zone Floor Area (ft^2)	Avg. Ceiling Height	Water Heating System 1	Status
PROPOSED ADU	Conditioned	New Mini split1	440	8	DHW Sys 1	New

OPAQUE SURFACES

01	02	03	04	05	06	07	08
Name	Zone	Construction	Azimuth	Orientation	Gross Area (ft^2)	Window and Door Area (ft2)	Tilt (deg)
FRONT Wall	PROPOSED ADU	R-15 Wall	0	Front	176	36	90
BACK Wall	PROPOSED ADU	R-15 Wall	180	Back	176	0	90
RIGHT Wall	PROPOSED ADU	R-15 Wall	90	Left	160	36	90

NOTICE: This document has been generated by California Home Energy Efficiency Rating Services (CHEERS) using information uploaded by third parties not affiliated with or related to CHEERS. Therefore, CHEERS is not responsible for, and cannot guarantee, the accuracy or completeness of the information contained in this document.

OPAQUE SURFACES

01	02	03	04	05	06	07	08
Name	Zone	Construction	Azimuth	Orientation	Gross Area (ft^2)	Window and Door Area (ft2)	Tilt (deg)
LEFT Wall	PROPOSED ADU	R-15 Wall	270	Right	160	4.5	90

OPAQUE SURFACES - CATHEDRAL CEILINGS

01	02	03	04	05	06	07	08	09	10	11
Name	Zone	Construction	Azimuth	Orientation	Area (ft^2)	Skylight Area (ft^2)	Roof Rise (x in 12)	Roof Reflectance	Roof Emittance	Cool Roof
Roof	PROPOSED ADU	R-30 Roof No Attic	0	Front	440	0	4	0.1	0.85	No

FENESTRATION / GLAZING

01	02	03	04	05	06	07	08	09	10	11	12	13	14
Name	Type	Surface	Orientation	Azimuth	Width (ft)	Height (ft)	Mult.	Area (ft^2)	U-factor	U-factor Source	SHGC	SHGC Source	Exterior Shading
Window-B	Window	FRONT Wall	Front	0			1	12	0.3	NFRC	0.25	NFRC	Bug Screen
Window-B 2	Window	FRONT Wall	Front	0			1	12	0.3	NFRC	0.25	NFRC	Bug Screen
Door-2	Window	FRONT Wall	Front	0			1	12	0.87	NFRC	0.7	NFRC	Bug Screen
Window-A	Window	RIGHT Wall	Left	90			1	16	0.3	NFRC	0.25	NFRC	Bug Screen
Window-C	Window	LEFT Wall	Right	270			1	4.5	0.3	NFRC	0.25	NFRC	Bug Screen

OPAQUE DOORS

01	02	03	04
Name	Side of Building	Area (ft^2)	U-factor
Door-1	RIGHT Wall	20	0.2

NOTICE: This document has been generated by California Home Energy Efficiency Rating Services (CHEERS) using information uploaded by third parties not affiliated with or related to CHEERS. Therefore, CHEERS is not responsible for, and cannot guarantee, the accuracy or completeness of the information contained in this document.

PROPERTY OF THE CITY OF UPLAND
DO NOT COPY OR ALTER

LAMFEI LIN BUILDERS
A PROFESSIONAL CORPORATION
970-546-2387
lflbuilders.com

PROJECT
PROJECT NAME

PROJECT ADDRESS

CITY OF UPLAND CALIFORNIA

DISCLAIMER:

BY USING THESE PERMIT READY CONSTRUCTION DOCUMENTS, THE RECIPIENT ACKNOWLEDGES, ACCEPTS AND VOLUNTARILY AFFIRMS THE FOLLOWING CONDITIONS:

1. THE USE OF THIS INFORMATION IS RESTRICTED TO THE ORIGINAL PROJECT FOR WHICH IT WAS PREPARED FOR; THE PERMIT READY ACCESSORY DWELLING UNIT (ADU) PROGRAM FOR THE CITY OF UPLAND ONLY. THIS IS A LIMITED SET OF STANDARDIZED ADU PLANS AND SPECIFICATIONS APPROVED BY THE CITY OF UPLAND BUILDING DEPARTMENT. BUILDING CODES DO CHANGE OVER TIME AND THE RECIPIENT SHALL ENSURE FULL COMPLIANCE UNDER ALL CODES THEN IN EFFECT AT THE TIME OF THE SUBJECT PERMIT. THIS DOES NOT ELIMINATE OR REDUCE THE RECIPIENT'S RESPONSIBILITY TO VERIFY ANY AND ALL INFORMATION RELEVANT TO THE RECIPIENT'S WORK AND RESPONSIBILITY ON THIS PROJECT. LAMFELI LIN BUILDERS SHALL NOT BE RESPONSIBLE FOR TRANSLATION ERRORS. DO NOT USE THESE CONSTRUCTION DOCUMENTS IF THE PERMIT HAS EXPIRED OR IS REVOKED AT ALL.

2. THE RECIPIENT RECOGNIZES AND ACKNOWLEDGES THAT THE USE OF THIS INFORMATION WILL BE AT THEIR SOLE RISK AND WITHOUT ANY LIABILITY OR LEGAL EXPOSURE TO LAMFELI LIN BUILDERS. NO WARRANTIES OF ANY NATURE, WHETHER EXPRESS OR IMPLIED, SHALL BE ATTACHED TO THESE DOCUMENTS AND THE INFORMATION CONTAINED THEREON. ANY USE, REUSE, OR ALTERATION OF THESE DOCUMENTS BY THE RECIPIENT OR BY OTHERS WILL BE AT THE RECIPIENT'S RISK AND FULL LEGAL RESPONSIBILITY. FURTHERMORE, THE RECIPIENT WILL, TO THE FULLEST EXTENT PERMITTED BY LAW, DEFEND, INDEMNIFY, AND HOLD LAMFELI LIN BUILDERS AND ITS ENGINEER HARMLESS FROM ANY AND ALL CLAIMS, SUITS, LIABILITY, DEMANDS, JUDGEMENTS, OR CONDITIONS ARISING OUT OF OR RESULTING THEREFROM ANY USE OF THESE CONSTRUCTION DOCUMENTS FOR OR ON ACCOUNT OF ANY INJURY, DEATH, DAMAGE OR LOSS TO PERSONS OR PROPERTY, INDIRECT OR CONSEQUENTIAL DAMAGES IN ANY AMOUNT. THIS INDEMNITY DOES NOT APPLY TO THE SOLE NEGLIGENCE OR WILLFUL MISCONDUCT OF LAMFELI LIN BUILDERS OR ITS ENGINEER.

3. THE DESIGN REPRESENTED BY THESE PLANS ARE COPYRIGHTED AND ARE SUBJECT TO COPYRIGHT PROTECTION.

4. IF THE RECIPIENT DOES NOT AGREE WITH THE ABOVE CONDITIONS, DO NOT PROCEED WITH THE CONSTRUCTION OF AN ADU OR OTHER IMPROVEMENT UNDER THESE PLANS AT ALL.

OWNER
SCALE
PROJECT NO.
DATE

STYLE

DESCRIPTION
TITLE 24 ENERGY CALCULATIONS

SHEET
T24-1

SLAB FLOORS

01	02	03	04	05	06	07	08
Name	Zone	Area (ft^2)	Perimeter (ft)	Edge Insul. R-value and Depth	Edge Insul. R-value and Depth	Carpeted Fraction	Heated
Slab-on-Grace	PROPOSED ADU	440	84	none	0	80%	No

OPAQUE SURFACE CONSTRUCTIONS

01	02	03	04	05	06	07	08
Construction Name	Surface Type	Construction Type	Framing	Total Cavity R-value	Interior / Exterior Continuous R-value	U-factor	Assembly Layers
R-15 Wall	Exterior Walls	Wood Framed Wall	2x4 @ 16 in. O. C.	R-15	None / None	0.095	Inside Finish: Gypsum Board Cavity / Frame: R-15 / 2x4 Exterior Finish: 3 Coat Stucco
R-30 Roof No Attic	Cathedral Ceilings	Wood Framed Ceiling	2x12 @ 16 in. O. C.	R-30	None / None	0.036	Roofing: Light Roof (Asphalt Shingle) Roof Deck: Wood Siding/sheathing/decking Cavity / Frame: R-30 / 2x12 Inside Finish: Gypsum Board

BUILDING ENVELOPE - HERS VERIFICATION

01	02	03	04	05
Quality Insulation Installation (QII)	High R-value Spray Foam Insulation	Building Envelope Air Leakage	CFM50	CFM50
Required	Not Required	N/A	n/a	n/a

WATER HEATING SYSTEMS

01	02	03	04	05	06	07	08	09
Name	System Type	Distribution Type	Water Heater Name	Number of Units	Solar Heating System	Compact Distribution	HERS Verification	Water Heater Name (#)
DHW Sys 1	Domestic Hot Water (DHW)	Standard	DHW Heater 1	1	n/a	None	n/a	DHW Heater 1 (1)

WATER HEATERS - NEEA HEAT PUMP

01	02	03	04	05	06	07	08
Name	# of Units	Tank Vol. (gal)	NEEA Heat Pump Brand	NEEA Heat Pump Model	Tank Location	Duct Inlet Air Source	Duct Outlet Air Source
DHW Heater 1	1	40	Rheem	PROPH40 T2 RH37530 (40 gal, JA13)	Outside	PROPOSED ADU	PROPOSED ADU

WATER HEATING - HERS VERIFICATION

01	02	03	04	05	06	07
Name	Pipe Insulation	Parallel Piping	Compact Distribution	Compact Distribution Type	Recirculation Control	Shower Drain Water Heat Recovery
DHW Sys 1 - 1/1	Not Required	Not Required	Not Required	None	Not Required	Not Required

SPACE CONDITIONING SYSTEMS

01	02	03	04	05	06	07	08	09
Name	System Type	Heating Unit Name	Heating Equipment Count	Cooling Unit Name	Cooling Equipment Count	Fan Name	Distribution Name	Required Thermostat Type
New Mini split1	Heat pump heating cooling	Heat Pump System 1	1	Heat Pump System 1	1	n/a	n/a	Setback

HVAC - HEAT PUMPS

01	02	03	04	05	06	07	08	09	10	11	12	13
Name	System Type	Number of Units	Heating				Cooling			Zonally Controlled	Compressor Type	HERS Verification
			Heating Efficiency Type	HSPF/HSPF2/COP	Cap 47	Cap 17	Cooling Efficiency Type	SEER/SEER2	EER/EER2/CEER			
Heat Pump System 1	VCHP-ductless	1	HSPF2	8	9000	7000	EER2SEER2	16	12	Not Zonal	Single Speed	Heat Pump System 1-hers-htpump

HVAC HEAT PUMPS - HERS VERIFICATION

01	02	03	04	05	06	07	08	09
Name	Verified Airflow	Airflow Target	Verified EER/EER2	Verified SEER/SEER2	Verified Refrigerant Charge	Verified HSPF/HSPF2	Verified Heating Cap 47	Verified Heating Cap 17
Heat Pump System 1-hers-htpump	Not Required	0	Required	Required	Yes	Yes	Yes	Yes

VARIABLE CAPACITY HEAT PUMP COMPLIANCE OPTION - HERS VERIFICATION

01	02	03	04	05	06	07	08	09	10
Name	Certified Low-Static VCHP System	Airflow to Habitable Rooms	Ductless Units in Conditioned Space	Wall Mount Thermostat	Air Filter Sizing & Pressure Drop Rating	Low Leakage Ducts in Conditioned Space	Minimum Airflow per RA3.3 and SC3.3.3.4.1	Certified non-continuous Fan	Indoor Fan not Running Continuously
Heat Pump System 1	Not required	Required	Required	Required	Not required	Not required	Not required	Not recuired	Not required

INDOOR AIR QUALITY (IAQ) FANS

01	02	03	04	05	06	07	08	09
Dwelling Unit	Airflow (CFM)	Fan Efficacy (W/CFM)	IAQ Fan Type	Includes Heat/Energy Recovery?	IAQ Recovery Effectiveness - SRE/ASRE	Includes Fault Indicator Display?	HERS Verification	Status
SFam IAQVentRpt	28	0.35	Exhaust	No	n/a / n/a	No	Yes	

DOCUMENTATION AUTHOR'S DECLARATION STATEMENT

I. I certify that this Certificate of Compliance documentation is accurate and complete.

Documentation Author Name: Maral Rahmani	Documentation Author Signature:
Company: Title24 Experts	Signature Date: 01/31/2025
Address: 7518 Jumilla Ave.	CEA/ HERS Certification Identification (If applicable):
City/State/Zip: Winnetka, CA 91306	Phone: 3105044878

RESPONSIBLE PERSON'S DECLARATION STATEMENT

I certify the following under penalty of perjury, under the laws of the State of California:

1. I am eligible under Division 3 of the Business and Professions Code to accept responsibility for the building design identified on this Certificate of Compliance.
2. I certify that the energy features and performance specifications identified on this Certificate of Compliance conform to the requirements of Title 24, Part 1 and Part 6 of the California Code of Regulations.
3. The building design features or system design features identified on this Certificate of Compliance are consistent with the information provided on other applicable compliance documents, worksheets, calculations, plans and specifications submitted to the enforcement agency for approval with this building permit application.

Responsible Designer Name: Maral Rahmani	Responsible Designer Signature:
Company: Title24 Experts	Date Signed: 01/31/2025
Address: 7518 Jumilla Ave.	License: M-35134
City/State/Zip: Winnetka, CA 91306	Phone: 3105044878

Digitally signed by California Home Energy Efficiency Rating Services (CHEERS). This digital signature is provided in order to secure the content of this registered document, and in no way implies Registration Provider responsibility for the accuracy of the information.

PROPERTY OF THE CITY OF UPLAND
DO NOT COPY OR ALTER

LAMFEI LIN BUILDERS
A PROFESSIONAL CORPORATION
970-546-2387
lflbuilders.com

PROJECT
PROJECT NAME
PROJECT ADDRESS

CITY OF UPLAND CALIFORNIA

DISCLAIMER:

BY USING THESE PERMIT READY CONSTRUCTION DOCUMENTS, THE RECIPIENT ACKNOWLEDGES, ACCEPTS AND VOLUNTARILY AFFIRMS THE FOLLOWING CONDITIONS:

1. THE USE OF THIS INFORMATION IS RESTRICTED TO THE ORIGINAL PROJECT FOR WHICH IT WAS PREPARED FOR; THE PERMIT READY ACCESSORY DWELLING UNIT (ADU) PROGRAM FOR THE CITY OF UPLAND ONLY. THIS IS A LIMITED SET OF STANDARDIZED ADU PLANS AND SPECIFICATIONS APPROVED BY THE CITY OF UPLAND BUILDING DEPARTMENT. BUILDING CODES DO CHANGE OVER TIME AND THE RECIPIENT SHALL ENSURE FULL COMPLIANCE UNDER ALL CODES THEN IN EFFECT AT THE TIME OF THE SUBJECT PERMIT. THIS DOES NOT ELIMINATE OR REDUCE THE RECIPIENT'S RESPONSIBILITY TO VERIFY ANY AND ALL INFORMATION RELEVANT TO THE RECIPIENT'S WORK AND RESPONSIBILITY ON THIS PROJECT. LAMFELI LIN BUILDERS SHALL NOT BE RESPONSIBLE FOR TRANSLATION ERRORS. DO NOT USE THESE CONSTRUCTION DOCUMENTS IF THE PERMIT HAS EXPIRED OR IS REVOKED AT ALL.

2. THE RECIPIENT RECOGNIZES AND ACKNOWLEDGES THAT THE USE OF THIS INFORMATION WILL BE AT THEIR SOLE RISK AND WITHOUT ANY LIABILITY OR LEGAL EXPOSURE TO LAMFELI LIN BUILDERS. NO WARRANTIES OF ANY NATURE, WHETHER EXPRESS OR IMPLIED, SHALL BE ATTACHED TO THESE DOCUMENTS AND THE INFORMATION CONTAINED THEREON. ANY USE, REUSE, OR ALTERATION OF THESE DOCUMENTS BY THE RECIPIENT OR BY OTHERS WILL BE AT THE RECIPIENT'S RISK AND FULL LEGAL RESPONSIBILITY. FURTHERMORE, THE RECIPIENT WILL, TO THE FULLEST EXTENT PERMITTED BY LAW, DEFEND, INDEMNIFY, AND HOLD LAMFELI LIN BUILDERS AND ITS ENGINEER HARMLESS FROM ANY AND ALL CLAIMS, SUITS, LIABILITY, DEMANDS, JUDGEMENTS, OR CONDITIONS ARISING OUT OF OR RESULTING THEREFROM ANY USE OF THESE CONSTRUCTION DOCUMENTS FOR OR ON ACCOUNT OF ANY INJURY, DEATH, DAMAGE OR LOSS TO PERSONS OR PROPERTY, INDIRECT OR CONSEQUENTIAL DAMAGES IN ANY AMOUNT. THIS INDEMNITY DOES NOT APPLY TO THE SOLE NEGLIGENCE OR WILLFUL MISCONDUCT OF LAMFELI LIN BUILDERS OR ITS ENGINEER.

3. THE DESIGN REPRESENTED BY THESE PLANS ARE COPYRIGHTED AND ARE SUBJECT TO COPYRIGHT PROTECTION.

4. IF THE RECIPIENT DOES NOT AGREE WITH THE ABOVE CONDITIONS, DO NOT PROCEED WITH THE CONSTRUCTION OF AN ADU OR OTHER IMPROVEMENT UNDER THESE PLANS AT ALL.

OWNER
SCALE
PROJECT NO.
DATE

STYLE

DESCRIPTION
TITLE 24 ENERGY CALCULATIONS

SHEET
T24-2

BUILDING ENERGY ANALYSIS REPORT

PROJECT:

440 SQFT ADU

, CA

Project Designer:

TOM CAMPBELL & ASSOCIATES, INC.
5331 GALLOWAY ST.
ALTA LOMA, CA 91701
(951) 741-2107

Report Prepared by:

Maral Rahmani

7518 JUMILLA AVE.
WINNETKA, CA 91306
818-561-9333

Job Number:

75-250128-01

Date:

1/29/2025

The EnergyPro computer program has been used to perform the calculations summarized in this compliance report. This program has approval and is authorized by the California Energy Commission for use with both the Residential and Nonresidential 2022 Building Energy Efficiency Standards.

This program developed by EnergySoft, LLC – www.energysoft.com.

RESIDENTIAL MEASURES SUMMARY — RMS-1

Project Name: 440 SQFT ADU	Building Type: ☑ Single Family ☐ Multi Family	☐ Addition Alone ☐ Existing+ Addition/Alteration		Date: 1/29/2025
Project Address	California Energy Climate Zone: CA Climate Zone 10	Total Cond. Floor Area: 440	Addition: n/a	# of Units: 1

INSULATION

Construction	Type	Cavity	Area (ft²)	Special Features	Status
Wall	Wood Framed	R 15	596		New
Door	Opaque Door	R-5	20		New
Slab	Unheated Slab-on-Grade	- no insulation	440	Perim = 84'	New
Roof	Wood Framed Rafter	R 30	440		New

FENESTRATION — Total Area: 57 — Glazing Percentage: 12.8% — New/Altered Average U-Factor: 0.42

Orientation	Area(ft²)	U-Fac	SHGC	Overhang	Sidefins	Exterior Shades	Status
Front (N)	24.0	0.300	0.25	none	none	N/A	New
Front (N)	12.0	0.870	0.70	none	none	N/A	New
Left (E)	16.0	0.300	0.25	none	none	N/A	New
Right (W)	4.5	0.300	0.25	none	none	N/A	New

HVAC SYSTEMS

Qty.	Heating	Min. Eff	Cooling	Min. Eff	Thermostat	Status
1	Electric Heat Pump	8.00 HSPF2	Split Heat Pump	16.0 SEER2	Setback	New

HVAC DISTRIBUTION

Location	Heating	Cooling	Duct Location	Duct R-Value	Status
New Mini split	Ducted	Ducted	n/a	n/a	New

WATER HEATING

Qty.	Type	Gallons	Min. Eff	Distribution	Status
1	Heat Pump	40	3.10	Standard	New

EnergyPro 9.3 by EnergySoft   User Number: 20127   ID: 75-250128-01   Page 12 of 18

2022 Single-Family Residential Mandatory Requirements Summary

NOTE: Single-family residential buildings subject to the Energy Codes must comply with all applicable mandatory measures, regardless of the compliance approach used. Review the respective section for more information.
(04/2022)

Building Envelope:

§ 110.6(a)1:	**Air Leakage.** Manufactured fenestration, exterior doors, and exterior pet doors must limit air leakage to 0.3 CFM per square foot or less when tested per NFRC-400, ASTM E283, or AAMA/WDMA/CSA 101/I.S.2/A440-2011. *
§ 110.6(a)5:	**Labeling.** Fenestration products and exterior doors must have a label meeting the requirements of § 10-111(a).
§ 110.6(b):	**Field fabricated exterior doors and fenestration** products must use U-factors and solar heat gain coefficient (SHGC) values from Tables 110.6-A, 110.6-B, or JA4.5 for exterior doors. They must be caulked and/or weather-stripped. *
§ 110.7:	**Air Leakage.** All joints, penetrations, and other openings in the building envelope that are potential sources of air leakage must be caulked, gasketed, or weather stripped.
§ 110.8(a):	**Insulation Certification by Manufacturers.** Insulation must be certified by the Department of Consumer Affairs, Bureau of Household Goods and Services (BHGS).
§ 110.8(g):	**Insulation Requirements for Heated Slab Floors.** Heated slab floors must be insulated per the requirements of § 110.8(g).
§ 110.8(i):	**Roofing Products Solar Reflectance and Thermal Emittance.** The thermal emittance and aged solar reflectance values of the roofing material must meet the requirements of § 110.8(i) and be labeled per §10-113 when the installation of a cool roof is specified on the CF1R.
§ 110.8(j):	**Radiant Barrier.** When required, radiant barriers must have an emittance of 0.05 or less and be certified to the Department of Consumer Affairs.
§ 150.0(a):	**Roof Deck, Ceiling and Rafter Roof Insulation.** Roof decks in newly constructed attics in climate zones 4 and 8-16 area-weighted average U-factor not exceeding U-0.184. Ceiling and rafter roofs minimum R-22 insulation in wood-frame ceiling; or area-weighted average U-factor must not exceed 0.043. Rafter roof alterations minimum R-19 or area-weighted average U-factor of 0.054 or less. Attic access doors must have permanently attached insulation using adhesive or mechanical fasteners. The attic access must be gasketed to prevent air leakage. Insulation must be installed in direct contact with a roof or ceiling which is sealed to limit infiltration and exfiltration as specified in § 110.7, including but not limited to placing insulation either above or below the roof deck or on top of a drywall ceiling. *
§ 150.0(b):	**Loose-fill Insulation.** Loose fill insulation must meet the manufacturer's required density for the labeled R-value.
§ 150.0(c):	**Wall Insulation.** Minimum R-13 insulation in 2x4 inch wood framing wall or have a U-factor of 0.102 or less, or R-20 in 2x6 inch wood framing or have a U-factor of 0.071 or less. Opaque non-framed assemblies must have an overall assembly U-factor not exceeding 0.102. Masonry walls must meet Tables 150.1-A or B. *
§ 150.0(d):	**Raised-floor Insulation.** Minimum R-19 insulation in raised wood framed floor or 0.037 maximum U-factor. *
§ 150.0(f):	**Slab Edge Insulation.** Slab edge insulation must meet all of the following: have a water absorption rate, for the insulation material alone without facings, no greater than 0.3 percent; have a water vapor permeance no greater than 2.0 perm per inch; be protected from physical damage and UV light deterioration; and, when installed as part of a heated slab floor, meet the requirements of § 110.8(g).
§ 150.0(g)1:	**Vapor Retarder.** In climate zones 1 through 16, the earth floor of unvented crawl space must be covered with a Class I or Class II vapor retarder. This requirement also applies to controlled ventilation crawl space for buildings complying with the exception to §150.0(d).
§ 150.0(g)2:	**Vapor Retarder.** In climate zones 14 and 16, a Class I or Class II vapor retarder must be installed on the conditioned space side of all insulation in all exterior walls, vented attics, and unvented attics with air-permeable insulation.
§ 150.0(q):	**Fenestration Products.** Fenestration, including skylights, separating conditioned space from unconditioned space or outdoors must have a maximum U-factor of 0.45; or area-weighted average U-factor of all fenestration must not exceed 0.45. *

Fireplaces, Decorative Gas Appliances, and Gas Log:

§ 110.5(e)	**Pilot Light.** Continuously burning pilot lights are not allowed for indoor and outdoor fireplaces.
§ 150.0(e)1:	**Closable Doors.** Masonry or factory-built fireplaces must have a closable metal or glass door covering the entire opening of the firebox.
§ 150.0(e)2:	**Combustion Intake.** Masonry or factory-built fireplaces must have a combustion outside air intake, which is at least six square inches in area and is equipped with a readily accessible, operable, and tight-fitting damper or combustion-air control device. *
§ 150.0(e)3:	**Flue Damper.** Masonry or factory-built fireplaces must have a flue damper with a readily accessible control. *

Space Conditioning, Water Heating, and Plumbing System:

§ 110.0-§ 110.3:	**Certification.** Heating, ventilation, and air conditioning (HVAC) equipment, water heaters, showerheads, faucets, and all other regulated appliances must be certified by the manufacturer to the California Energy Commission. *
§ 110.2(a):	**HVAC Efficiency.** Equipment must meet the applicable efficiency requirements in Table 110.2-A through Table 110.2-N. *
§ 110.2(b):	**Controls for Heat Pumps with Supplementary Electric Resistance Heaters.** Heat pumps with supplementary electric resistance heaters must have controls that prevent supplementary heater operation when the heating load can be met by the heat pump alone; and in which the cut-on temperature for compression heating is higher than the cut-on temperature for supplementary heating, and the cut-off temperature for compression heating is higher than the cut-off temperature for supplementary heating. *
§ 110.2(c):	**Thermostats.** All heating or cooling systems not controlled by a central energy management control system (EMCS) must have a setback thermostat. *
§ 110.3(c)3:	**Insulation.** Unfired service water heater storage tanks and solar water-heating backup tanks must have adequate insulation, or tank surface heat loss rating.
§ 110.3(c)6:	**Isolation Valves.** Instantaneous water heaters with an input rating greater than 6.8 kBtu per hour (2 kW) must have isolation valves with hose bibbs or other fittings on both cold and hot water lines to allow for flushing the water heater when the valves are closed.

5/6/22

2022 Single-Family Residential Mandatory Requirements Summary

§ 110.5:	**Pilot Lights.** Continuously burning pilot lights are prohibited for natural gas: fan-type central furnaces; household cooking appliances (except appliances without an electrical supply voltage connection with pilot lights that consume less than 150 Btu per hour); and pool and spa heaters. *
§ 150.0(h)1:	**Building Cooling and Heating Loads.** Heating and/or cooling loads are calculated in accordance with the ASHRAE Handbook, Equipment Volume, Applications Volume, and Fundamentals Volume; the SMACNA Residential Comfort System Installation Standards Manual; or the ACCA Manual J using design conditions specified in § 150.0(h)2.
§ 150.0(h)3A:	**Clearances.** Air conditioner and heat pump outdoor condensing units must have a clearance of at least five feet from the outlet of any dryer.
§ 150.0(h)3B:	**Liquid Line Drier.** Air conditioners and heat pump systems must be equipped with liquid line filter driers if required, as specified by the manufacturer's instructions.
§ 150.0(j)1:	**Water Piping, Solar Water-heating System Piping, and Space Conditioning System Line Insulation.** All domestic hot water piping must be insulated as specified in § 609.11 of the California Plumbing Code. *
§ 150.0(j)2:	**Insulation Protection.** Piping insulation must be protected from damage, including that due to sunlight, moisture, equipment maintenance, and wind as required by §120.3(b). Insulation exposed to weather must be water retardant and protected from UV light (no adhesive tapes). Insulation covering chilled water piping and refrigerant suction piping located outside the conditioned space must include, or be protected by, a Class I or Class II vapor retarder. Pipe insulation buried below grade must be installed in a waterproof and non-crushable casing or sleeve.
§ 150.0(n)1:	**Gas or Propane Water Heating Systems.** Systems using gas or propane water heaters to serve individual dwelling units must designate a space at least 2.5' x 2.5' x 7' suitable for the future installation of a heat pump water heater, and meet electrical and plumbing requirements, based on the distance between this designated space and the water heater location; and a condensate drain no more than 2" higher than the base of the water heater
§ 150.0(n)3:	**Solar Water-heating Systems.** Solar water-heating systems and collectors must be certified and rated by the Solar Rating and Certification Corporation (SRCC), the International Association of Plumbing and Mechanical Officials, Research and Testing (IAPMO R&T), or by a listing agency that is approved by the executive director.

Ducts and Fans:

§ 110.8(d)3:	**Ducts.** Insulation installed on an existing space-conditioning duct must comply with § 604.0 of the California Mechanical Code (CMC). If a contractor installs the insulation, the contractor must certify to the customer, in writing, that the insulation meets this requirement.
§ 150.0(m)1:	**CMC Compliance.** All air-distribution system ducts and plenums must meet CMC §§ 601.0-605.0 and ANSI/SMACNA-006-2006 HVAC Duct Construction Standards Metal and Flexible 3rd Edition. Portions of supply-air and return-air ducts and plenums must be insulated to R-6.0 or higher; ducts located entirely in conditioned space as confirmed through field verification and diagnostic testing (RA3.1.4.3.8) do not require insulation. Connections of metal ducts and inner core of flexible ducts must be mechanically fastened. Openings must be sealed with mastic, tape, or other duct-closure system that meets the applicable UL requirements, or aerosol sealant that meets UL 723. The combination of mastic and either mesh or tape must be used to seal openings greater than ¼", If mastic or tape is used. Building cavities, air handler support platforms, and plenums designed or constructed with materials other than sealed sheet metal, duct board or flexible duct must not be used to convey conditioned air. Building cavities and support platforms may contain ducts; ducts installed in these spaces must not be compressed. *
§ 150.0(m)2:	**Factory-Fabricated Duct Systems.** Factory-fabricated duct systems must comply with applicable requirements for duct construction, connections, and closures; joints and seams of duct systems and their components must not be sealed with cloth back rubber adhesive duct tapes unless such tape is used in combination with mastic and draw bands.
§ 150.0(m)3:	**Field-Fabricated Duct Systems.** Field-fabricated duct systems must comply with applicable requirements for: pressure-sensitive tapes, mastics, sealants, and other requirements specified for duct construction.
§ 150.0(m)7:	**Backdraft Damper.** Fan systems that exchange air between the conditioned space and outdoors must have backdraft or automatic dampers.
§ 150.0(m)8:	**Gravity Ventilation Dampers.** Gravity ventilating systems serving conditioned space must have either automatic or readily accessible, manually operated dampers in all openings to the outside, except combustion inlet and outlet air openings and elevator shaft vents.
§ 150.0(m)9:	**Protection of Insulation.** Insulation must be protected from damage due to sunlight, moisture, equipment maintenance, and wind. Insulation exposed to weather must be suitable for outdoor service (e.g., protected by aluminum, sheet metal, painted canvas, or plastic cover). Cellular foam insulation must be protected as above or painted with a water retardant and solar radiation-resistant coating.
§ 150.0(m)10:	**Porous Inner Core Flex Duct.** Porous inner cores of flex ducts must have a non-porous layer or air barrier between the inner core and outer vapor barrier.
§ 150.0(m)11:	**Duct System Sealing and Leakage Test.** When space conditioning systems use forced air duct systems to supply conditioned air to an occupiable space, the ducts must be sealed and duct leakage tested, as confirmed through field verification and diagnostic testing, in accordance with Reference Residential Appendix RA3.1.
§ 150.0(m)12:	**Air Filtration.** Space conditioning systems with ducts exceeding 10 feet and the supply side of ventilation systems must have MERV 13 or equivalent filters. Filters for space conditioning systems must have a two inch depth or can be one inch if sized per Equation 150.0-A. Clean-filter pressure drop and labeling must meet the requirements in §150.0(m)12. Filters must be accessible for regular service. Filter racks or grilles must use gaskets, sealing, or other means to close gaps around the inserted filters to and prevents air from bypassing the filter. *

5/6/22

2022 Single-Family Residential Mandatory Requirements Summary

§ 150.0(m)13:	**Space Conditioning System Airflow Rate and Fan Efficacy.** Space conditioning systems that use ducts to supply cooling must have a hole for the placement of a static pressure probe, or a permanently installed static pressure probe in the supply plenum. Airflow must be ≥ 350 CFM per ton of nominal cooling capacity, and an air-handling unit fan efficacy ≤ 0.45 watts per CFM for gas furnace air handlers and ≤ 0.58 watts per CFM for all others. Small duct high velocity systems must provide an airflow ≥ 250 CFM per ton of nominal cooling capacity, and an air-handling unit fan efficacy ≤ 0.62 watts per CFM. Field verification testing is required in accordance with Reference Residential Appendix RA3.3. *

Ventilation and Indoor Air Quality:

§ 150.0(o)1:	**Requirements for Ventilation and Indoor Air Quality.** All dwelling units must meet the requirements of ASHRAE Standard 62.2, Ventilation and Acceptable Indoor Air Quality in Residential Buildings subject to the amendments specified in § 150.0(o)1. *
§ 150.0(o)1B:	**Central Fan Integrated (CFI) Ventilation Systems.** Continuous operation of CFI air handlers is not allowed to provide the whole-dwelling unit ventilation airflow required per §150.0(o)1C. A motorized damper(s) must be installed on the ventilation duct(s) that prevents all airflow through the space conditioning duct system when the damper(s) is closed andcontrolled per §150.0(o)1Biii&iv. CFI ventilation systems must have controls that track outdoor air ventilation run time, and either open or close the motorized damper(s) for compliance with §150.0(o)1C.
§ 150.0(o)1C:	**Whole-Dwelling Unit Mechanical Ventilation for Single-Family Detached and townhouses.** Single-family detached dwelling units, and attached dwelling units not sharing ceilings or floors with other dwelling units, occupiable spaces, public garages, or commercial spaces must have mechanical ventilation airflow specified in § 150.0(o)1Ci-iii.
§ 150.0(o)1G:	**Local Mechanical Exhaust.** Kitchens and bathrooms must have local mechanical exhaust; nonenclosed kitchens must have demand-controlled exhaust system meeting requirements of §150.0(o)1Gii,enclosed kitchens and bathrooms can use demand-controlled or continuous exhaust meeting §150.0(o)1Giii-iv. Airflow must be measured by the installer per §150.0(o)1Gv, and rated for sound per §150.0(o)1Gvi. *
§ 150.0(o)1H&I:	**Airflow Measurement and Sound Ratings of Whole-Dwelling Unit Ventilation Systems.** The airflow required per § 150.0(o)1C must be measured by using a flow hood, flow grid, or other airflow measuring device at the fan's inlet or outlet terminals/grilles per Reference Residential Appendix RA3.7. Whole-Dwelling unit ventilation systems must be rated for sound per ASHRAE 62.2 §7.2 at no less than the minimum airflow rate required by §150.0(o)1C.
§ 150.0(o)2:	**Field Verification and Diagnostic Testing.** Whole-Dwelling Unit ventilation airflow, vented range hood airflow and sound rating, and HRV and ERV fan efficacy must be verified in accordance with Reference Residential Appendix RA3.7. Vented range hoods must be verified per Reference Residential Appendix RA3.7.4.3 to confirm if it is rated by HVI or AHAM to comply with the airflow rates and sound requirements per §150.0(o)1G

Pool and Spa Systems and Equipment:

§ 110.4(a):	**Certification by Manufacturers.** Any pool or spa heating system or equipment must be certified to have all of the following: compliance with the Appliance Efficiency Regulations and listing in MAEDbS; an on-off switch mounted outside of the heater that allows shutting off the heater without adjusting the thermostat setting; a permanent weatherproof plate or card with operating instructions; and must not use electric resistance heating. *
§ 110.4(b)1:	**Piping.** Any pool or spa heating system or equipment must be installed with at least 36 inches of pipe between the filter and the heater, or dedicated suction and return lines, or built-in or built-up connections to allow for future solar heating.
§ 110.4(b)2:	**Covers.** Outdoor pools or spas that have a heat pump or gas heater must have a cover.
§ 110.4(b)3:	**Directional Inlets and Time Switches for Pools.** Pools must have directional inlets that adequately mix the pool water, and a time switch that will allow all pumps to be set or programmed to run only during off-peak electric demand periods.
§ 110.5:	**Pilot Light.** Natural gas pool and spa heaters must not have a continuously burning pilot light.
§ 150.0(p):	**Pool Systems and Equipment Installation.** Residential pool systems or equipment must meet the specified requirements for pump sizing, flow rate, piping, filters, and valves. *

Lighting:

§ 110.9:	**Lighting Controls and Components.** All lighting control devices and systems, ballasts, and luminaires must meet the applicable requirements of § 110.9. *
§ 150.0(k)1A:	**Luminaire Efficacy.** All installed luminaires must meet the requirements in Table 150.0-A, except lighting integral to exhaust fans, kitchen range hoods, bath vanity mirrors, and garage door openers; navigation lighting less than 5 watts; and lighting internal to drawers, cabinets, and linen closets with an efficacy of at least 45 lumens per watt.
§ 150.0(k)1B:	**Screw based luminaires.** Screw based luminaires must contain lamps that comply with Reference Joint Appendix JA8. *
§ 150.0(k)1C:	**Recessed Downlight Luminaires in Ceilings.** Luminaires recessed into ceilings must not contain screw based sockets, must be airtight, and must be sealed with a gasket or caulk. California Electrical Code § 410.116 must also be met.
§ 150.0(k)1D:	**Light Sources in Enclosed or Recessed Luminaires.** Lamps and other separable light sources that are not compliant with the JA8 elevated temperature requirements, including marking requirements, must not be installed in enclosed or recessed luminaires.
§ 150.0(k)1E:	**Blank Electrical Boxes.** The number of electrical boxes that are more than five feet above the finished floor and do not contain a luminaire or other device shall be no more than the number of bedrooms. These boxes must be served by a dimmer, vacancy sensor control, low voltage wiring, or fan speed control.
§ 150.0(k)1F:	**Lighting Integral to Exhaust Fans.** Lighting integral to exhaust fans (except when installed by the manufacturer in kitchen exhaust hoods) must meet the applicable requirements of § 150.0(k). *

5/6/22

2022 Single-Family Residential Mandatory Requirements Summary

§ 150.0(k)1G:	**Screw based luminaires.** Screw based luminaires must contain lamps that comply with Reference Joint Appendix JA8. *
§ 150.0(k)1H:	**Light Sources in Enclosed or Recessed Luminaires.** Lamps and other separable light sources that are not compliant with the JA8 elevated temperature requirements, including marking requirements, must not be installed in enclosed or recessed luminaires.
§ 150.0(k)1I:	**Light Sources in Drawers, Cabinets, and Linen Closets.** Light sources internal to drawers, cabinetry or linen closets are not required to comply with Table 150.0-A or be controlled by vacancy sensors provided that they are rated to consume no more than 5 watts of power, emit no more than 150 lumens, and are equipped with controls that automatically turn the lighting off when the drawer, cabinet or linen closet is closed.
§ 150.0(k)2A:	**Interior Switches and Controls.** All forward phase cut dimmers used with LED light sources must comply with NEMA SSL 7A.
§ 150.0(k)2B:	**Interior Switches and Controls.** Exhaust fans must be controlled separately from lighting systems. *
§ 150.0(k)2A:	**Accessible Controls.** Lighting must have readily accessible wall-mounted controls that allow the lighting to be manually turned on and off. *
§ 150.0(k)2B:	**Multiple Controls.** Controls must not bypass a dimmer, occupant sensor, or vacancy sensor function if the dimmer or sensor is installed to comply with § 150.0(k).
§ 150.0(k)2C:	**Mandatory Requirements.** Lighting controls must comply with the applicable requirements of § 110.9.
§ 150.0(k)2D:	**Energy Management Control Systems.** An energy management control system (EMCS) may be used to comply with dimming, occupancy, and control requirements if it provides the functionality of the specified control per § 110.9 and the physical controls specified in § 150.0(k)2A.
§ 150.0(k)2E:	**Automatic Shutoff Controls.** In bathrooms, garages, laundry rooms, utility rooms and walk-in closets, at least one installed luminaire must be controlled by an occupancy or vacancy sensor providing automatic-off functionality. Lighting inside drawers and cabinets with opaque fronts or doors must have controls that turn the light off when the drawer or door is closed.
§ 150.0(k)2F:	**Dimmers.** Lighting in habitable spaces (e.g., living rooms, dining rooms, kitchens, and bedrooms) must have readily accessible wall-mounted dimming controls that allow the lighting to be manually adjusted up and down. Forward phase cut dimmers controlling LED light sources in these spaces must comply with NEMA SSL 7A.
§ 150.0(k)2K:	**Independent controls.** Integrated lighting of exhaust fans shall be controlled independently from the fans. Lighting under cabinets or shelves, lighting in display cabinets, and switched outlets must be controlled separately from ceiling-installed lighting.
§ 150.0(k)3A:	**Residential Outdoor Lighting.** For single-family residential buildings, outdoor lighting permanently mounted to a residential building, or to other buildings on the same lot, must have a manual on/off switch and either a photocell and motion sensor or automatic time switch control) or an astronomical time clock. An energy management control system that provides the specified control functionality and meets all applicable requirements may be used to meet these requirements.
§ 150.0(k)4:	**Internally illuminated address signs.** Internally illuminated address signs must either comply with § 140.8 or consume no more than 5 watts of power.
§ 150.0(k)5:	**Residential Garages for Eight or More Vehicles.** Lighting for residential parking garages for eight or more vehicles must comply with the applicable requirements for nonresidential garages in §§ 110.9, 130.0, 130.1, 130.4, 140.6, and 141.0.

Solar Readiness:

§ 110.10(a)1:	**Single-family Residences.** Single-family residences located in subdivisions with 10 or more single-family residences and where the application for a tentative subdivision map for the residences has been deemed complete and approved by the enforcement agency, which do not have a photovoltaic system installed, must comply with the requirements of § 110.10(b)-(e).
§110.10(b)1A:	**Minimum Solar Zone Area.** The solar zone must have a minimum total area as described below. The solar zone must comply with access, pathway, smoke ventilation, and spacing requirements as specified in Title 24, Part 9 or other parts of Title 24 or in any requirements adopted by a local jurisdiction. The solar zone total area must be comprised of areas that have no dimension less than 5 feet and are no less than 80 square feet each for buildings with roof areas less than or equal to 10,000 square feet or no less than 160 square feet each for buildings with roof areas greater than 10,000 square feet. For single-family residences, the solar zone must be located on the roof or overhang of the building and have a total area no less than 250 square feet. *
§ 110.10(b)2:	**Azimuth.** All sections of the solar zone located on steep-sloped roofs must have an azimuth between 90-300° of true north.
§ 110.10(b)3A:	**Shading.** The solar zone must not contain any obstructions, including but not limited to: vents, chimneys, architectural features, and roof mounted equipment. *
§ 110.10(b)3B:	**Shading.** Any obstruction located on the roof or any other part of the building that projects above a solar zone must be located at least twice the horizontal distance of the height difference between the highest point of the obstruction and the horizontal projection of the nearest point of the solar zone, measured in the vertical plane. *
§ 110.10(b)4:	**Structural Design Loads on Construction Documents.** For areas of the roof designated as a solar zone, the structural design loads for roof dead load and roof live load must be clearly indicated on the construction documents.
§ 110.10(c):	**Interconnection Pathways.** The construction documents must indicate: a location reserved for inverters and metering equipment and a pathway reserved for routing of conduit from the solar zone to the point of interconnection with the electrical service; and for single-family residences and central water-heating systems, a pathway reserved for routing plumbing from the solar zone to the water-heating system.
§ 110.10(d):	**Documentation.** A copy of the construction documents or a comparable document indicating the information from § 110.10(b)-(c) must be provided to the occupant.
§ 110.10(e)1:	**Main Electrical Service Panel.** The main electrical service panel must have a minimum busbar rating of 200 amps.
§ 110.10(e)2:	**Main Electrical Service Panel.** The main electrical service panel must have a reserved space to allow for the installation of a double pole circuit breaker for a future solar electric installation. The reserved space must be permanently marked as "For Future Solar Electric."

Electric and Energy Storage Ready:

5/6/22

2022 Single-Family Residential Mandatory Requirements Summary

§ 150.0(s)	**Energy Storage System (ESS) Ready.** All single-family residences must meet all of the following: Either ESS-ready interconnection equipment with backed up capacity of 60 amps or more and four or more ESS supplied branch circuits, *or* a dedicated raceway from the main service to a subpanel that supplies the branch circuits in § 150.0(s); at least four branch circuits must be identified and have their source collocated at a single panelboard suitable to be supplied by the ESS, with one circuit supplying the refrigerator, one lighting circuit near the primary exit, and one circuit supplying a sleeping room receptacle outlet; main panelboard must have a minimum busbar rating of 225 amps; sufficient space must be reserved to allow future installation of a system isolation equipment/transfer switch within 3' of the main panelboard, with raceways installed between the panelboard and the switch location to allow the connection of backup power source.
§ 150.0(t)	**Heat Pump Space Heater Ready.** Systems using gas or propane furnaces to serve individual dwelling units must include: A dedicated unobstructed 240V branch circuit wiring installed within 3' of the furnace with circuit conductors rated at least 30 amps with the blank cover identified as "240V ready;" and a reserved main electrical service panel space to allow for the installation of a double pole circuit breaker permanently marked as "For Future 240V use."
§ 150.0(u)	**Electric Cooktop Ready.** Systems using gas or propane cooktop to serve individual dwelling units must include: A dedicated unobstructed 240V branch circuit wiring installed within 3' of the cooktop with circuit conductors rated at least 50 amps with the blank cover identified as "240V ready;" and a reserved main electrical service panel space to allow for the installation of a double pole circuit breaker permanently marked as "For Future 240V use."
§ 150.0(v)	**Electric Clothes Dryer Ready.** Clothes dryer locations with gas or propane plumbing to serve individual dwelling units must include: A dedicated unobstructed 240V branch circuit wiring installed within 3' of the dryer location with circuit conductors rated at least 30 amps with the blank cover identified as "240V ready;" and a reserved main electrical service panel space to allow for the installation of a double pole circuit breaker permanently marked as "For Future 240V use."

*Exceptions may apply.

5/6/22

5/6/22

HVAC SYSTEM HEATING AND COOLING LOADS SUMMARY

Project Name: 440 SQFT ADU — Date: 1/29/2025
System Name: New Mini split — Floor Area: 440

ENGINEERING CHECKS

Number of Systems	1
Heating System	
Output per System	9,000
Total Output (Btuh)	9,000
Output (Btuh/sqft)	20.5
Cooling System	
Output per System	9,000
Total Output (Btuh)	9,000
Total Output (Tons)	0.8
Total Output (Btuh/sqft)	20.5
Total Output (sqft/Ton)	586.7
Air System	
CFM per System	0
Airflow (cfm)	0
Airflow (cfm/sqft)	0.00
Airflow (cfm/Ton)	0.0
Outside Air (%)	0.0%
Outside Air (cfm/sqft)	0.00

Note: values above given at ARI conditions

SYSTEM LOAD

	COIL COOLING PEAK			COIL HTG. PEAK	
	CFM	Sensible	Latent	CFM	Sensible
Total Room Loads	238	4,752	147	275	7,435
Return Vented Lighting		0			
Return Air Ducts		213			275
Return Fan		0			0
Ventilation	0	0	0	0	0
Supply Fan		0			0
Supply Air Ducts		213			275
TOTAL SYSTEM LOAD		5,178	147		7,985

HVAC EQUIPMENT SELECTION

Standard Heat Pump	8,161	0		5,776
Total Adjusted System Output (Adjusted for Peak Design conditions)	8,161	0		5,776
TIME OF SYSTEM PEAK		Aug 3 PM		Jan 1 AM

HEATING SYSTEM PSYCHROMETRICS (Airstream Temperatures at Time of Heating Peak)

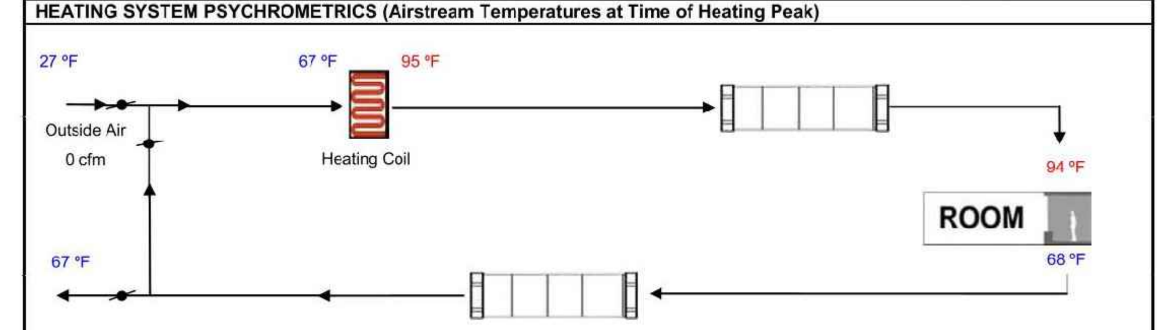

COOLING SYSTEM PSYCHROMETRICS (Airstream Temperatures at Time of Cooling Peak)

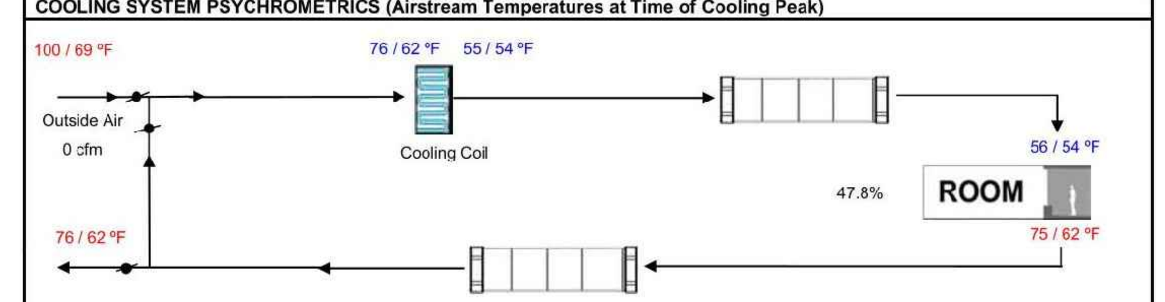

LAMFEI LIN BUILDERS
A PROFESSIONAL CORPORATION

970-546-2387
lflbuilders.com

PROJECT
PROJECT NAME

PROJECT ADDRESS

CITY OF UPLAND — CALIFORNIA

DISCLAIMER:

BY USING THESE PERMIT READY CONSTRUCTION DOCUMENTS, THE RECIPIENT ACKNOWLEDGES, ACCEPTS AND VOLUNTARILY AFFIRMS THE FOLLOWING CONDITIONS:

1. THE USE OF THIS INFORMATION IS RESTRICTED TO THE ORIGINAL PROJECT FOR WHICH IT WAS PREPARED FOR; THE PERMIT READY ACCESSORY DWELLING UNIT (ADU) PROGRAM FOR THE CITY OF UPLAND ONLY. THIS IS A LIMITED SET OF STANDARDIZED ADU PLANS AND SPECIFICATIONS APPROVED BY THE CITY OF UPLAND BUILDING DEPARTMENT. BUILDING CODES DO CHANGE OVER TIME AND THE RECIPIENT SHALL ENSURE FULL COMPLIANCE UNDER ALL CODES THEN IN EFFECT AT THE TIME OF THE SUBJECT PERMIT. THIS DOES NOT ELIMINATE OR REDUCE THE RECIPIENT'S RESPONSIBILITY TO VERIFY ANY AND ALL INFORMATION RELEVANT TO THE RECIPIENT'S WORK AND RESPONSIBILITY ON THIS PROJECT. LAMFELI LIN BUILDERS SHALL NOT BE RESPONSIBLE FOR TRANSLATION ERRORS. DO NOT USE THESE CONSTRUCTION DOCUMENTS IF THE PERMIT HAS EXPIRED OR IS REVOKED AT ALL.

2. THE RECIPIENT RECOGNIZES AND ACKNOWLEDGES THAT THE USE OF THIS INFORMATION WILL BE AT THEIR SOLE RISK AND WITHOUT ANY LIABILITY OR LEGAL EXPOSURE TO LAMFELI LIN BUILDERS. NO WARRANTIES OF ANY NATURE, WHETHER EXPRESS OR IMPLIED, SHALL BE ATTACHED TO THESE DOCUMENTS AND THE INFORMATION CONTAINED THEREON. ANY USE, REUSE, OR ALTERATION OF THESE DOCUMENTS BY THE RECIPIENT OR BY OTHERS WILL BE AT THE RECIPIENT'S RISK AND FULL LEGAL RESPONSIBILITY. FURTHERMORE, THE RECIPIENT WILL, TO THE FULLEST EXTENT PERMITTED BY LAW, DEFEND, INDEMNIFY, AND HOLD LAMFELI LIN BUILDERS AND ITS ENGINEER HARMLESS FROM ANY AND ALL CLAIMS, SUITS, LIABILITY, DEMANDS, JUDGEMENTS, OR CONDITIONS ARISING OUT OF OR RESULTING THEREFROM ANY USE OF THESE CONSTRUCTION DOCUMENTS FOR OR ON ACCOUNT OF ANY INJURY, DEATH, DAMAGE OR LOSS TO PERSONS OR PROPERTY, INDIRECT OR CONSEQUENTIAL DAMAGES IN ANY AMOUNT. THIS INDEMNITY DOES NOT APPLY TO THE SOLE NEGLIGENCE OR WILLFUL MISCONDUCT OF LAMFELI LIN BUILDERS OR ITS ENGINEER.

3. THE DESIGN REPRESENTED BY THESE PLANS ARE COPYRIGHTED AND ARE SUBJECT TO COPYRIGHT PROTECTION.

4. IF THE RECIPIENT DOES NOT AGREE WITH THE ABOVE CONDITIONS, DO NOT PROCEED WITH THE CONSTRUCTION OF AN ADU OR OTHER IMPROVEMENT UNDER THESE PLANS AT ALL.

OWNER
SCALE
PROJECT NO.
DATE

STYLE

DESCRIPTION
2022 RESIDENTIAL MANDATORY REQUIREMENTS

SHEET
T24-3

PROPERTY OF THE CITY OF UPLAND
DO NOT COPY OR ALTER

2022 CALIFORNIA GREEN BUILDING STANDARDS CODE
RESIDENTIAL MANDATORY MEASURES, SHEET 1 (January 2023)

CHAPTER 3
GREEN BUILDING
SECTION 301 GENERAL

301.1 SCOPE. Buildings shall be designed to include the green building measures specified as mandatory in the application checklists contained in this code. Voluntary green building measures are also included in the application checklists and may be included in the design and construction of structures covered by this code, but are not required unless adopted by a city, county, or city and county as specified in Section 101.7.

301.1.1 Additions and alterations. [HCD] The mandatory provisions of Chapter 4 shall be applied to additions or alterations of existing residential buildings where the addition or alteration increases the building's conditioned area, volume, or size. The requirements shall apply only to and/or within the specific area of the addition or alteration.

The mandatory provision of Section 4.106.4.2 may apply to additions or alterations of existing parking facilities or the addition of new parking facilities serving existing multifamily buildings. See Section 4.106.4.3 for application.

Note: Repairs including, but not limited to, resurfacing, restriping and repairing or maintaining existing lighting fixtures are not considered alterations for the purpose of this section.

Note: On and after January 1, 2014, residential buildings undergoing permitted alterations, additions, or improvements shall replace noncompliant plumbing fixtures with water-conserving plumbing fixtures. Plumbing fixture replacement is required prior to issuance of a certificate of final completion, certificate of occupancy or final permit approval by the local building department. See Civil Code Section 1101.1, et seq., for the definition of a noncompliant plumbing fixture, types of residential buildings affected and other important enactment dates.

301.2 LOW-RISE AND HIGH-RISE RESIDENTIAL BUILDINGS. [HCD] The provisions of individual sections of CALGreen may apply to either low-rise residential buildings high-rise residential buildings, or both. Individual sections will be designated by banners to indicate where the section applies specifically to low-rise only (LR) or high-rise only (HR). When the section applies to both low-rise and high-rise buildings, no banner will be used.

SECTION 302 MIXED OCCUPANCY BUILDINGS

302.1 MIXED OCCUPANCY BUILDINGS. In mixed occupancy buildings, each portion of a building shall comply with the specific green building measures applicable to each specific occupancy.
Exceptions:
1. [HCD] Accessory structures and accessory occupancies serving residential buildings shall comply with Chapter 4 and Appendix A4, as applicable.
2. [HCD] For purposes of *CALGreen*, live/work units, complying with Section 419 of the *California Building Code*, shall not be considered mixed occupancies. Live/Work units shall comply with Chapter 4 and Appendix A4, as applicable.

DIVISION 4.1 PLANNING AND DESIGN

ABBREVIATION DEFINITIONS:

HCD	Department of Housing and Community Development
BSC	California Building Standards Commission
DSA-SS	Division of the State Architect, Structural Safety
OSHPD	Office of Statewide Health Planning and Development
LR	Low Rise
HR	High Rise
AA	Additions and Alterations
N	New

CHAPTER 4
RESIDENTIAL MANDATORY MEASURES

SECTION 4.102 DEFINITIONS
4.102.1 DEFINITIONS
The following terms are defined in Chapter 2 *(and are included here for reference)*

FRENCH DRAIN. A trench, hole or other depressed area loosely filled with rock, gravel, fragments of brick or similar pervious material used to collect or channel drainage or runoff water.

WATTLES. Wattles are used to reduce sediment in runoff. Wattles are often constructed of natural plant materials such as hay, straw or similar material shaped in the form of tubes and placed on a downflow slope. Wattles are also used for perimeter and inlet controls.

4.106 SITE DEVELOPMENT
4.106.1 GENERAL. Preservation and use of available natural resources shall be accomplished through evaluation and careful planning to minimize negative effects on the site and adjacent areas. Preservation of slopes, management of storm water drainage and erosion controls shall comply with this section.

4.106.2 STORM WATER DRAINAGE AND RETENTION DURING CONSTRUCTION. Projects which disturb less than one acre of soil and are not part of a larger common plan of development which in total disturbs one acre or more, shall manage storm water drainage during construction. In order to manage storm water drainage during construction, one or more of the following measures shall be implemented to prevent flooding of adjacent property, prevent erosion and retain soil runoff on the site.

1. Retention basins of sufficient size shall be utilized to retain storm water on the site.
2. Where storm water is conveyed to a public drainage system, collection point, gutter or similar disposal method, water shall be filtered by use of a barrier system, wattle or other method approved by the enforcing agency.
3. Compliance with a lawfully enacted storm water management ordinance.

Note: Refer to the State Water Resources Control Board for projects which disturb one acre or more of soil, or are part of a larger common plan of development which in total disturbs one acre or more of soil.

(Website: https://www.waterboards.ca.gov/water_issues/programs/stormwater/construction.html)

4.106.3 GRADING AND PAVING. Construction plans shall indicate how the site grading or drainage system will manage all surface water flows to keep water from entering buildings. Examples of methods to manage surface water include, but are not limited to, the following:

1. Swales
2. Water collection and disposal systems
3. French drains
4. Water retention gardens
5. Other water measures which keep surface water away from buildings and aid in groundwater recharge.

Exception: Additions and alterations not altering the drainage path.

4.106.4 Electric vehicle (EV) charging for new construction. New construction shall comply with Sections 4.106.4.1 or 4.106.4.2 to facilitate future installation and use of EV chargers. Electric vehicle supply equipment (EVSE) shall be installed in accordance with the *California Electrical Code*, Article 625.

Exceptions:
1. On a case-by-case basis, where the local enforcing agency has determined EV charging and infrastructure are not feasible based upon one or more of the following conditions:
   1.1. Where there is no local utility power supply or the local utility is unable to supply adequate power.
   1.2 Where there is evidence suitable to the local enforcing agency substantiating that additional local utility infrastructure design requirements, directly related to the implementation of Section 4.106.4, may adversely impact the construction cost of the project.
2. Accessory Dwelling Units (ADU) and Junior Accessory Dwelling Units (JADU) without additional parking facilities.

4.106.4.1 New one- and two-family dwellings and townhouses with attached private garages. For each dwelling unit, install a listed raceway to accommodate a dedicated 208/240-volt branch circuit. The raceway shall not be less than trade size 1 (nominal 1-inch inside diameter). The raceway shall originate at the main service or subpanel and shall terminate into a listed cabinet, box or other enclosure in close proximity to the proposed location of an EV charger. Raceways are required to be continuous at enclosed, inaccessible or concealed areas and spaces. The service panel and/or subpanel shall provide capacity to install a 40-ampere 208/240-volt minimum dedicated branch circuit and space(s) reserved to permit installation of a branch circuit overcurrent protective device.

Exemption: A raceway is not required if a minimum 40-ampere 208/240-volt dedicated EV branch circuit is installed in close proximity to the proposed location of an EV charger at the time of original construction in accordance with the *California Electrical Code*.

4.106.4.1.1 Identification. The service panel or subpanel circuit directory shall identify the overcurrent protective device space(s) reserved for future EV charging as "EV CAPABLE". The raceway termination location shall be permanently and visibly marked as "EV CAPABLE".

4.106.4.2 New multifamily dwellings, hotels and motels and new residential parking facilities.
When parking is provided, parking spaces for new multifamily dwellings, hotels and motels shall meet the requirements of Sections 4.106.4.2.1 and 4.106.4.2.2. Calculations for spaces shall be rounded up to the nearest whole number. A parking space served by electric vehicle supply equipment or designed as a future EV charging space shall count as at least one standard automobile parking space only for the purpose of complying with any applicable minimum parking space requirements established by a local jurisdiction. See Vehicle Code Section 22511.2 for further details.

4.106.4.2.1Multifamily development projects with less than 20 dwelling units; and hotels and motels with less than 20 sleeping units or guest rooms.
The number of dwelling units, sleeping units or guest rooms shall be based on all buildings on a project site subject to this section.

1.EV Capable. Ten (10) percent of the total number of parking spaces on a building site, provided for all types of parking facilities, shall be electric vehicle charging spaces (EV spaces) capable of supporting future Level 2 EVSE. Electrical load calculations shall demonstrate that the electrical panel service capacity and electrical system, including any on-site distribution transformer(s), have sufficient capacity to simultaneously charge all EVs at all required EV spaces at a minimum of 40 amperes.

The service panel or subpanel circuit directory shall identify the overcurrent protective device space(s) reserved for future EV charging purposes as "EV CAPABLE" in accordance with the California Electrical Code.

Exceptions:

1.When EV chargers (Level 2 EVSE) are installed in a number equal to or greater than the required number of EV capable spaces.

2.When EV chargers (Level 2 EVSE) are installed in a number less than the required number of EV capable spaces, the number of EV capable spaces required may be reduced by a number equal to the number of EV chargers installed.

Notes:

a.Construction documents are intended to demonstrate the project's capability and capacity for facilitating future EV charging.

b.There is no requirement for EV spaces to be constructed or available until receptacles for EV charging or EV chargers are installed for use.

2.EV Ready. Twenty-five (25) percent of the total number of parking spaces shall be equipped with low power Level 2 EV charging receptacles. For multifamily parking facilities, no more than one receptacle is required per dwelling unit when more than one parking space is provided for use by a single dwelling unit.

Exception: Areas of parking facilities served by parking lifts.

4.106.4.2.2 Multifamily development projects with 20 or more dwelling units, hotels and motels with 20 or more sleeping units or guest rooms.
The number of dwelling units, sleeping units or guest rooms shall be based on all buildings on a project site subject to this section.

1.EV Capable. Ten (10) percent of the total number of parking spaces on a building site, provided for all types of parking facilities, shall be electric vehicle charging spaces (EV spaces) capable of supporting future Level 2 EVSE. Electrical load calculations shall demonstrate that the electrical panel service capacity and electrical system, including any on-site distribution transformer(s), have sufficient capacity to simultaneously charge all EVs at all required EV spaces at a minimum of 40 amperes.

The service panel or subpanel circuit directory shall identify the overcurrent protective device space(s) reserved for future EV charging purposes as "EV CAPABLE" in accordance with the California Electrical Code.

Exception: When EV chargers (Level 2 EVSE) are installed in a number greater than five (5) percent of parking spaces required by Section 4.106.4.2.2, Item 3, the number of EV capable spaces required may be reduced by a number equal to the number of EV chargers installed over the five (5) percent required.

Notes:

a.Construction documents shall show locations of future EV spaces.

b.There is no requirement for EV spaces to be constructed or available until receptacles for EV charging or EV chargers are installed for use.

2.EV Ready. Twenty-five (25) percent of the total number of parking spaces shall be equipped with low power Level 2 EV charging receptacles. For multifamily parking facilities, no more than one receptacle is required per dwelling unit when more than one parking space is provided for use by a single dwelling unit.

Exception: Areas of parking facilities served by parking lifts.

3.EV Chargers. Five (5) percent of the total number of parking spaces shall be equipped with Level 2 EVSE. Where common use parking is provided, at least one EV charger shall be located in the common use parking area and shall be available for use by all residents or guests.

When low power Level 2 EV charging receptacles or Level 2 EVSE are installed beyond the minimum required, an automatic load management system (ALMS) may be used to reduce the maximum required electrical capacity to each space served by the ALMS. The electrical system and any on-site distribution transformers shall have sufficient capacity to deliver at least 3.3 kW simultaneously to each EV charging station (EVCS) served by the ALMS. The branch circuit shall have a minimum capacity of 40 amperes, and installed EVSE shall have a capacity of not less than 30 amperes. ALMS shall not be used to reduce the minimum required electrical capacity to the required EV capable spaces.

4.106.4.2.2.1 Electric vehicle charging stations (EVCS).
Electric vehicle charging stations required by Section 4.106.4.2.2, Item 3, shall comply with Section 4.106.4.2.2.1.

Exception: Electric vehicle charging stations serving public accommodations, public housing, motels and hotels shall not be required to comply with this section. See California Building Code, Chapter 11B, for applicable requirements.

4.106.4.2.2.1.1 Location.
EVCS shall comply with at least one of the following options:

1.The charging space shall be located adjacent to an accessible parking space meeting the requirements of the California Building Code, Chapter 11A, to allow use of the EV charger from the accessible parking space.

2.The charging space shall be located on an accessible route, as defined in the California Building Code, Chapter 2, to the building.

Exception: Electric vehicle charging stations designed and constructed in compliance with the California Building Code, Chapter 11B, are not required to comply with Section 4.106.4.2.2.1.1 and Section 4.106.4.2.2.1.2, Item 3.

4.106.4.2.2.1.2 Electric vehicle charging stations (EVCS) dimensions.
The charging spaces shall be designed to comply with the following:

1.The minimum length of each EV space shall be 18 feet (5486 mm).

2.The minimum width of each EV space shall be 9 feet (2743 mm).

3.One in every 25 charging spaces, but not less than one, shall also have an 8-foot (2438 mm) wide minimum aisle. A 5-foot (1524 mm) wide minimum aisle shall be permitted provided the minimum width of the EV space is 12 feet (3658 mm).

a.Surface slope for this EV space and the aisle shall not exceed 1 unit vertical in 48 units horizontal (2.083 percent slope) in any direction.

4.106.4.2.2.1.3 Accessible EV spaces.
In addition to the requirements in Sections 4.106.4.2.2.1.1 and 4.106.4.2.2.1.2, all EVSE, when installed, shall comply with the accessibility provisions for EV chargers in the California Building Code, Chapter 11B. EV ready spaces and EVCS in multifamily developments shall comply with California Building Code, Chapter 11A, Section 1109A.

4.106.4.2.3 EV space requirements.
1.Single EV space required. Install a listed raceway capable of accommodating a 208/240-volt dedicated branch circuit. The raceway shall not be less than trade size 1 (nominal 1-inch inside diameter). The raceway shall originate at the main service or subpanel and shall terminate into a listed cabinet, box or enclosure in close proximity to the location or the proposed location of the EV space. Construction documents shall identify the raceway termination point, receptacle or charger location, as applicable. The service panel and/ or subpanel shall have a 40-ampere minimum dedicated branch circuit, including branch circuit overcurrent protective device installed, or space(s) reserved to permit installation of a branch circuit overcurrent protective device.

Exception: A raceway is not required if a minimum 40-ampere 208/240-volt dedicated EV branch circuit is installed in close proximity to the location or the proposed location of the EV space, at the time of original construction in accordance with the California Electrical Code.

2.Multiple EV spaces required. Construction documents shall indicate the raceway termination point and the location of installed or future EV spaces, receptacles or EV chargers. Construction documents shall also provide information on amperage of installed or future receptacles or EVSE, raceway method(s), wiring schematics and electrical load calculations. Plan design shall be based upon a 40-ampere minimum branch circuit. Required raceways and related components that are planned to be installed underground, enclosed, inaccessible or in concealed areas and spaces shall be installed at the time of original construction.

Exception: A raceway is not required if a minimum 40-ampere 208/240-volt dedicated EV branch circuit is installed in close proximity to the location or the proposed location of the EV space at the time of original construction in accordance with the California Electrical Code.

4.106.4.2.4 Identification.
The service panel or subpanel circuit directory shall identify the overcurrent protective device space(s) reserved for future EV charging purposes as "EV CAPABLE" in accordance with the California Electrical Code.

4.106.4.2.5 Electric Vehicle Ready Space Signage.
Electric vehicle ready spaces shall be identified by signage or pavement markings, in compliance with Caltrans Traffic Operations Policy Directive 13-01 (Zero Emission Vehicle Signs and Pavement Markings) or its successor(s).

4.106.4.3 Electric vehicle charging for additions and alterations of parking facilities serving existing multifamily buildings.
When new parking facilities are added, or electrical systems or lighting of existing parking facilities are added or altered and the work requires a building permit, ten (10) percent of the total number of parking spaces added or altered shall be electric vehicle charging spaces (EV spaces) capable of supporting future Level 2 EVSE.

Notes:

1.Construction documents are intended to demonstrate the project's capability and capacity for facilitating future EV charging.

2.There is no requirement for EV spaces to be constructed or available until EV chargers are installed for use.

DIVISION 4.2 ENERGY EFFICIENCY

4.201 GENERAL
4.201.1 SCOPE. For the purposes of mandatory energy efficiency standards in this code, the California Energy Commission will continue to adopt mandatory standards.

DIVISION 4.3 WATER EFFICIENCY AND CONSERVATION

4.303 INDOOR WATER USE
4.303.1 WATER CONSERVING PLUMBING FIXTURES AND FITTINGS. Plumbing fixtures (water closets and urinals) and fittings (faucets and showerheads) shall comply with the sections 4.303.1.1, 4.303.1.2, 4.303.1.3, and 4.303.4.4.

Note: All noncompliant plumbing fixtures in any residential real property shall be replaced with water-conserving plumbing fixtures. Plumbing fixture replacement is required prior to issuance of a certificate of final completion, certificate of occupancy, or final permit approval by the local building department. See Civil Code Section 1101.1, et seq., for the definition of a noncompliant plumbing fixture, types of residential buildings affected and other important enactment dates.

4.303.1.1 Water Closets. The effective flush volume of all water closets shall not exceed 1.28 gallons per flush. Tank-type water closets shall be certified to the performance criteria of the U.S. EPA WaterSense Specification for Tank-type Toilets.

Note: The effective flush volume of dual flush toilets is defined as the composite, average flush volume of two reduced flushes and one full flush.

4.303.1.2 Urinals. The effective flush volume of wall mounted urinals shall not exceed 0.125 gallons per flush. The effective flush volume of all other urinals shall not exceed 0.5 gallons per flush.

4.303.1.3 Showerheads.

4.303.1.3.1 Single Showerhead. Showerheads shall have a maximum flow rate of not more than 1.8 gallons per minute at 80 psi. Showerheads shall be certified to the performance criteria of the U.S. EPA WaterSense Specification for Showerheads.

4.303.1.3.2 Multiple showerheads serving one shower. When a shower is served by more than one showerhead, the combined flow rate of all the showerheads and/or other shower outlets controlled by a single valve shall not exceed 1.8 gallons per minute at 80 psi, or the shower shall be designed to only allow one shower outlet to be in operation at a time.

Note: A hand-held shower shall be considered a showerhead.

4.303.1.4 Faucets.

4.303.1.4.1 Residential Lavatory Faucets. The maximum flow rate of residential lavatory faucets shall not exceed 1.2 gallons per minute at 60 psi. The minimum flow rate of residential lavatory faucets shall not be less than 0.8 gallons per minute at 20 psi.

4.303.1.4.2 Lavatory Faucets in Common and Public Use Areas. The maximum flow rate of lavatory faucets installed in common and public use areas (outside of dwellings or sleeping units) in residential buildings shall not exceed 0.5 gallons per minute at 60 psi.

4.303.1.4.3 Metering Faucets. Metering faucets when installed in residential buildings shall not deliver more than 0.2 gallons per cycle.

4.303.1.4.4 Kitchen Faucets. The maximum flow rate of kitchen faucets shall not exceed 1.8 gallons per minute at 60 psi. Kitchen faucets may temporarily increase the flow above the maximum rate, but not to exceed 2.2 gallons per minute at 60 psi, and must default to a maximum flow rate of 1.8 gallons per minute at 60 psi.

Note: Where complying faucets are unavailable, aerators or other means may be used to achieve reduction.

4.303.1.4.5 Pre-rinse spray valves.
When installed, shall meet the requirements in the *California Code of Regulations*, Title 20 (Appliance Efficiency Regulations), Sections 1605.1 (h)(4) Table H-2, Section 1605.3 (h)(4)(A), and Section 1607 (d)(7) and shall be equipped with an integral automatic shutoff.

FOR REFERENCE ONLY: The following table and code section have been reprinted from the *California Code of Regulations*, Title 20 (Appliance Efficiency Regulations),Section 1605.1 (h)(4) and Section 1605.3 (h)(4)(A).

TABLE H-2

STANDARDS FOR COMMERCIAL PRE-RINSE SPRAY VALUES MANUFACTURED ON OR AFTER JANUARY 28, 2019

PRODUCT CLASS [spray force in ounce force (ozf)]	MAXIMUM FLOW RATE (gpm)
Product Class 1 (≤ 5.0 ozf)	1.00
Product Class 2 (> 5.0 ozf and ≤ 8.0 ozf)	1.20
Product Class 3 (> 8.0 ozf)	1.28

Title 20 Section 1605.3 (h)(4)(A): Commercial prerinse spray values manufactured on or after January 1, 2006, shall have a minimum spray force of not less than 4.0 ounces-force (ozf)[113 grams-force(gf)]

4.303.2 Submeters for multifamily buildings and dwelling units in mixed-used residential/commercial buildings.
Submeters shall be installed to measure water usage of individual rental dwelling units in accordance with the *California Plumbing Code.*

4.303.3 Standards for plumbing fixtures and fittings. Plumbing fixtures and fittings shall be installed in accordance with the *California Plumbing Code*, and shall meet the applicable standards referenced in Table 1701.1 of the *California Plumbing Code*.

NOTE:
THIS TABLE COMPILES THE DATA IN SECTION 4.303.1, AND IS INCLUDED AS A CONVENIENCE FOR THE USER.

TABLE - MAXIMUM FIXTURE WATER USE

FIXTURE TYPE	FLOW RATE
SHOWER HEADS (RESIDENTIAL)	1.8 GMP @ 80 PSI
LAVATORY FAUCETS (RESIDENTIAL)	MAX. 1.2 GPM @ 60 PSI MIN. 0.8 GPM @ 20 PSI
LAVATORY FAUCETS IN COMMON & PUBLIC USE AREAS	0.5 GPM @ 60 PSI
KITCHEN FAUCETS	1.8 GPM @ 60 PSI
METERING FAUCETS	0.2 GAL/CYCLE
WATER CLOSET	1.28 GAL/FLUSH
URINALS	0.125 GAL/FLUSH

4.304 OUTDOOR WATER USE
4.304.1 OUTDOOR POTABLE WATER USE IN LANDSCAPE AREAS. Residential developments shall comply with a local water efficient landscape ordinance or the current California Department of Water Resources' Model Water Efficient Landscape Ordinance (MWELO), whichever is more stringent.

NOTES:

1. The Model Water Efficient Landscape Ordinance (MWELO) is located in the *California Code Regulations,* Title 23, Chapter 2.7, Division 2. MWELO and supporting documents, including water budget calculator, are available at: https://www.water.ca.gov/

DIVISION 4.4 MATERIAL CONSERVATION AND RESOURCE EFFICIENCY

4.406 ENHANCED DURABILITY AND REDUCED MAINTENANCE
4.406.1 RODENT PROOFING. Annular spaces around pipes, electric cables, conduits or other openings in sole/bottom plates at exterior walls shall be protected against the passage of rodents by closing such openings with cement mortar, concrete masonry or a similar method acceptable to the enforcing agency.

4.408 CONSTRUCTION WASTE REDUCTION, DISPOSAL AND RECYCLING
4.408.1 CONSTRUCTION WASTE MANAGEMENT. Recycle and/or salvage for reuse a minimum of 65 percent of the non-hazardous construction and demolition waste in accordance with either Section 4.408.2, 4.408.3 or 4.408.4, or meet a more stringent local construction and demolition waste management ordinance.

Exceptions:

1. Excavated soil and land-clearing debris.
2. Alternate waste reduction methods developed by working with local agencies if diversion or recycle facilities capable of compliance with this item do not exist or are not located reasonably close to the jobsite.
3. The enforcing agency may make exceptions to the requirements of this section when isolated jobsites are located in areas beyond the haul boundaries of the diversion facility.

4.408.2 CONSTRUCTION WASTE MANAGEMENT PLAN. Submit a construction waste management plan in conformance with Items 1 through 5. The construction waste management plan shall be updated as necessary and shall be available during construction for examination by the enforcing agency.

1. Identify the construction and demolition waste materials to be diverted from disposal by recycling, reuse on the project or salvage for future use or sale.
2. Specify if construction and demolition waste materials will be sorted on-site (source separated) or bulk mixed (single stream).
3. Identify diversion facilities where the construction and demolition waste material collected will be taken.
4. Identify construction methods employed to reduce the amount of construction and demolition waste generated.
5. Specify that the amount of construction and demolition waste materials diverted shall be calculated by weight or volume, but not by both.

4.408.3 WASTE MANAGEMENT COMPANY. Utilize a waste management company, approved by the enforcing agency, which can provide verifiable documentation that the percentage of construction and demolition waste material diverted from the landfill complies with Section 4.408.1.

Note: The owner or contractor may make the determination if the construction and demolition waste materials will be diverted by a waste management company.

4.408.4 WASTE STREAM REDUCTION ALTERNATIVE [LR]. Projects that generate a total combined weight of construction and demolition waste disposed of in landfills, which do not exceed 3.4 lbs./sq.ft. of the building area shall meet the minimum 65% construction waste reduction requirement in Section 4.408.1

4.408.4.1 WASTE STREAM REDUCTION ALTERNATIVE. Projects that generate a total combined weight of construction and demolition waste disposed of in landfills, which do not exceed 2 pounds per square foot of the building area, shall meet the minimum 65% construction waste reduction requirement in Section 4.408.1

4.408.5 DOCUMENTATION. Documentation shall be provided to the enforcing agency which demonstrates compliance with Section 4.408.2, items 1 through 5, Section 4.408.3 or Section 4.408.4..

Notes:

1. Sample forms found in "A Guide to the California Green Building Standards Code (Residential)" located at www.hcd.ca.gov/CALGreen.html may be used to assist in documenting compliance with this section.
2. Mixed construction and demolition debris (C & D) processors can be located at the California Department of Resources Recycling and Recovery (CalRecycle).

4.410 BUILDING MAINTENANCE AND OPERATION
4.410.1 OPERATION AND MAINTENANCE MANUAL. At the time of final inspection, a manual, compact disc, web-based reference or other media acceptable to the enforcing agency which includes all of the following shall be placed in the building:

1. Directions to the owner or occupant that the manual shall remain with the building throughout the life cycle of the structure.
2. Operation and maintenance instructions for the following:
   a. Equipment and appliances, including water-saving devices and systems, HVAC systems, photovoltaic systems, electric vehicle chargers, water-heating systems and other major appliances and equipment.
   b. Roof and yard drainage, including gutters and downspouts.
   c. Space conditioning systems, including condensers and air filters.
   d. Landscape irrigation systems.
   e. Water reuse systems.
3. Information from local utility, water and waste recovery providers on methods to further reduce resource consumption, including recycle programs and locations.
4. Public transportation and/or carpool options available in the area.
5. Educational material on the positive impacts of an interior relative humidity between 30-60 percent and what methods an occupant may use to maintain the relative humidity level in that range.
6. Information about water-conserving landscape and irrigation design and controllers which conserve water.
7. Instructions for maintaining gutters and downspouts and the importance of diverting water at least 5 feet away from the foundation.
8. Information on required routine maintenance measures, including, but not limited to, caulking, painting, grading around the building, etc.
9. Information about state solar energy and incentive programs available.
10. A copy of all special inspections verifications required by the enforcing agency or this code.
11. Information from the Department of Forestry and Fire Protection on maintenance of defensible space around residential structures.
12. Information and/or drawings identifying the location of grab bar reinforcements.

4.410.2 RECYCLING BY OCCUPANTS. Where 5 or more multifamily dwelling units are constructed on a building site, provide readily accessible area(s) that serves all buildings on the site and are identified for the depositing, storage and collection of non-hazardous materials for recycling, including (at a minimum) paper, corrugated cardboard, glass, plastics, organic waster, and metals, or meet a lawfully enacted local recycling ordinance, if more restrictive.

Exception: Rural jurisdictions that meet and apply for the exemption in Public Resources Code Section 42649.82 (a)(2)(A) et seq. are note required to comply with the organic waste portion of this section.

DIVISION 4.5 ENVIRONMENTAL QUALITY

SECTION 4.501 GENERAL
4.501.1 Scope
The provisions of this chapter shall outline means of reducing the quality of air contaminants that are odorous, irritating and/or harmful to the comfort and well being of a building's installers, occupants and neighbors.

SECTION 4.502 DEFINITIONS
5.102.1 DEFINITIONS
The following terms are defined in Chapter 2 *(and are included here for reference)*

AGRIFIBER PRODUCTS. Agrifiber products include wheatboard, strawboard, panel substrates and door cores, not including furniture, fixtures and equipment (FF&E) not considered base building elements.

COMPOSITE WOOD PRODUCTS. Composite wood products include hardwood plywood, particleboard and medium density fiberboard. "Composite wood products" does not include hardboard, structural plywood, structural panels, structural composite lumber, oriented strand board, glued laminated timber, prefabricated wood I-joists or finger-jointed lumber, all as specified in California Code of regulations (CCR), title 17, Section 93120.1.

DIRECT-VENT APPLIANCE. A fuel-burning appliance with a sealed combustion system that draws all air for combustion from the outside atmosphere and discharges all flue gases to the outside atmosphere.

PROPERTY OF THE CITY OF UPLAND
DO NOT COPY OR ALTER

DISCLAIMER: THIS DOCUMENT IS PROVIDED AND INTENDED TO BE USED AS A MEANS TO INDICATE AREAS OF COMPLIANCE WITH THE CALIFORNIA GREEN BUILDING STANDARDS (CALGREEN) CODE. DUE TO THE VARIABLES BETWEEN BUILDING DEPARTMENT JURISDICTIONS, THIS CHECKLIST IS TO BE USED ON AN INDIVIDUAL PROJECT BASIS AND MAY BE MODIFIED BY THE END USER TO MEET THOSE INDIVIDUAL NEEDS. THE END USER ASSUMES ALL RESPONSIBILITY ASSOCIATED WITH THE USE OF THIS DOCUMENT, INCLUDING VERIFICATION WITH THE FULL CODE.

LAMFEI LIN BUILDERS
A PROFESSIONAL CORPORATION
970-546-2387
lflbuilders.com

PROJECT
PROJECT NAME

PROJECT ADDRESS

CITY OF UPLAND CALIFORNIA

DISCLAIMER:

BY USING THESE PERMIT READY CONSTRUCTION DOCUMENTS, THE RECIPIENT ACKNOWLEDGES, ACCEPTS AND VOLUNTARILY AFFIRMS THE FOLLOWING CONDITIONS:

1. THE USE OF THIS INFORMATION IS RESTRICTED TO THE ORIGINAL PROJECT FOR WHICH IT WAS PREPARED FOR; THE PERMIT READY ACCESSORY DWELLING UNIT (ADU) PROGRAM FOR THE CITY OF UPLAND ONLY. THIS IS A LIMITED SET OF STANDARDIZED ADU PLANS AND SPECIFICATIONS APPROVED BY THE CITY OF UPLAND BUILDING DEPARTMENT. BUILDING CODES DO CHANGE OVER TIME AND THE RECIPIENT SHALL ENSURE FULL COMPLIANCE UNDER ALL CODES THEN IN EFFECT AT THE TIME OF THE SUBJECT PERMIT. THIS DOES NOT ELIMINATE OR REDUCE THE RECIPIENT'S RESPONSIBILITY TO VERIFY ANY AND ALL INFORMATION RELEVANT TO THE RECIPIENT'S WORK AND RESPONSIBILITY ON THIS PROJECT. LAMFEI LIN BUILDERS SHALL NOT BE RESPONSIBLE FOR TRANSLATION ERRORS. DO NOT USE THESE CONSTRUCTION DOCUMENTS IF THE PERMIT HAS EXPIRED OR IS REVOKED AT ALL.

2. THE RECIPIENT RECOGNIZES AND ACKNOWLEDGES THAT THE USE OF THIS INFORMATION WILL BE AT THEIR SOLE RISK AND WITHOUT ANY LIABILITY OR LEGAL EXPOSURE TO LAMFEI LIN BUILDERS. NO WARRANTIES OF ANY NATURE, WHETHER EXPRESS OR IMPLIED, SHALL BE ATTACHED TO THESE DOCUMENTS AND THE INFORMATION CONTAINED THEREON. ANY USE, REUSE, OR ALTERATION OF THESE DOCUMENTS BY THE RECIPIENT OR BY OTHERS WILL BE AT THE RECIPIENT'S RISK AND FULL LEGAL RESPONSIBILITY. FURTHERMORE, THE RECIPIENT WILL, TO THE FULLEST EXTENT PERMITTED BY LAW, DEFEND, INDEMNIFY, AND HOLD LAMFEI LIN BUILDERS AND ITS ENGINEER HARMLESS FROM ANY AND ALL CLAIMS, SUITS, LIABILITY, DEMANDS, JUDGEMENTS, OR CONDITIONS ARISING OUT OF OR RESULTING THEREFROM ANY USE OF THESE CONSTRUCTION DOCUMENTS FOR OR ON ACCOUNT OF ANY INJURY, DEATH, DAMAGE OR LOSS TO PERSONS OR PROPERTY, INDIRECT OR CONSEQUENTIAL DAMAGES IN ANY AMOUNT. THIS INDEMNITY DOES NOT APPLY TO THE SOLE NEGLIGENCE OR WILLFUL MISCONDUCT OF LAMFEI LIN BUILDERS OR ITS ENGINEER.

3. THE DESIGN REPRESENTED BY THESE PLANS ARE COPYRIGHTED AND ARE SUBJECT TO COPYRIGHT PROTECTION.

4. IF THE RECIPIENT DOES NOT AGREE WITH THE ABOVE CONDITIONS, DO NOT PROCEED WITH THE CONSTRUCTION OF AN ADU OR OTHER IMPROVEMENT UNDER THESE PLANS AT ALL.

OWNER
SCALE
PROJECT NO.
DATE

STYLE

DESCRIPTION
GREEN BUILDING REQUIREMENTS

SHEET
GB-1

2022 CALIFORNIA GREEN BUILDING STANDARDS CODE
RESIDENTIAL MANDATORY MEASURES, SHEET 2 (January 2023)

MAXIMUM INCREMENTAL REACTIVITY (MIR). The maximum change in weight of ozone formed by adding a compound to the "Base Reactive Organic Gas (ROG) Mixture" per weight of compound added, expressed to hundredths of a gram (g O^3/g ROC).
Note: MIR values for individual compounds and hydrocarbon solvents are specified in CCR, Title 17, Sections 94700 and 94701.

MOISTURE CONTENT. The weight of the water in wood expressed in percentage of the weight of the oven-dry wood.

PRODUCT-WEIGHTED MIR (PWMIR). The sum of all weighted-MIR for all ingredients in a product subject to this article. The PWMIR is the total product reactivity expressed to hundredths of a gram of ozone formed per gram of product (excluding container and packaging).
Note: PWMIR is calculated according to equations found in CCR, Title 17, Section 94521 (a).

REACTIVE ORGANIC COMPOUND (ROC). Any compound that has the potential, once emitted, to contribute to ozone formation in the troposphere.

VOC. A volatile organic compound (VOC) broadly defined as a chemical compound based on carbon chains or rings with vapor pressures greater than 0.1 millimeters of mercury at room temperature. These compounds typically contain hydrogen and may contain oxygen, nitrogen and other elements. See CCR Title 17, Section 94508(a).

4.503 FIREPLACES
4.503.1 GENERAL. Any installed gas fireplace shall be a direct-vent sealed-combustion type. Any installed woodstove or pellet stove shall comply with U.S. EPA New Source Performance Standards (NSPS) emission limits as applicable, and shall have a permanent label indicating they are certified to meet the emission limits. Woodstoves, pellet stoves and fireplaces shall also comply with applicable local ordinances.

4.504 POLLUTANT CONTROL
4.504.1 COVERING OF DUCT OPENINGS & PROTECTION OF MECHANICAL EQUIPMENT DURING CONSTRUCTION. At the time of rough installation, during storage on the construction site and until final startup of the heating, cooling and ventilating equipment, all duct and other related air distribution component openings shall be covered with tape, plastic, sheet metal or other methods acceptable to the enforcing agency to reduce the amount of water, dust or debris which may enter the system.

4.504.2 FINISH MATERIAL POLLUTANT CONTROL. Finish materials shall comply with this section.

4.504.2.1 Adhesives, Sealants and Caulks. Adhesives, sealant and caulks used on the project shall meet the requirements of the following standards unless more stringent local or regional air pollution or air quality management district rules apply:

1. Adhesives, adhesive bonding primers, adhesive primers, sealants, sealant primers and caulks shall comply with local or regional air pollution control or air quality management district rules where applicable or SCAQMD Rule 1168 VOC limits, as shown in Table 4.504.1 or 4.504.2, as applicable. Such products also shall comply with the Rule 1168 prohibition on the use of certain toxic compounds (chloroform, ethylene dichloride, methylene chloride, perchloroethylene and tricloroethylene), except for aerosol products, as specified in Subsection 2 below.
2. Aerosol adhesives, and smaller unit sizes of adhesives, and sealant or caulking compounds (in units of product, less packaging, which do not weigh more than 1 pound and do not consist of more than 16 fluid ounces) shall comply with statewide VOC standards and other requirements, including prohibitions on use of certain toxic compounds, of *California Code of Regulations,* Title 17, commencing with section 94507.

4.504.2.2 Paints and Coatings. Architectural paints and coatings shall comply with VOC limits in Table 1 of the ARB Architectural Suggested Control Measure, as shown in Table 4.504.3, unless more stringent local limits apply. The VOC content limit for coatings that do not meet the definitions for the specialty coatings categories listed in Table 4.504.3 shall be determined by classifying the coating as a Flat, Nonflat or Nonflat-High Gloss coating, based on its gloss, as defined in subsections 4.21, 4.36, and 4.37 of the 2007 California Air Resources Board, Suggested Control Measure, and the corresponding Flat, Nonflat or Nonflat-High Gloss VOC limit in Table 4.504.3 shall apply.

4.504.2.3 Aerosol Paints and Coatings. Aerosol paints and coatings shall meet the Product-weighted MIR Limits for ROC in Section 94522(a)(2) and other requirements, including prohibitions on use of certain toxic compounds and ozone depleting substances, in Sections 94522(e)(1) and (f)(1) of *California Code of Regulations*, Title 17, commencing with Section 94520; and in areas under the jurisdiction of the Bay Area Air Quality Management District additionally comply with the percent VOC by weight of product limits of Regulation 8, Rule 49.

4.504.2.4 Verification. Verification of compliance with this section shall be provided at the request of the enforcing agency. Documentation may include, but is not limited to, the following:

1. Manufacturer's product specification.
2. Field verification of on-site product containers.

TABLE 4.504.1 - ADHESIVE VOC LIMIT[1,2]

(Less Water and Less Exempt Compounds in Grams per Liter)

ARCHITECTURAL APPLICATIONS	VOC LIMIT
INDOOR CARPET ADHESIVES	50
CARPET PAD ADHESIVES	50
OUTDOOR CARPET ADHESIVES	150
WOOD FLOORING ADHESIVES	100
RUBBER FLOOR ADHESIVES	60
SUBFLOOR ADHESIVES	50
CERAMIC TILE ADHESIVES	65
VCT & ASPHALT TILE ADHESIVES	50
DRYWALL & PANEL ADHESIVES	50
COVE BASE ADHESIVES	50
MULTIPURPOSE CONSTRUCTION ADHESIVE	70
STRUCTURAL GLAZING ADHESIVES	100
SINGLE-PLY ROOF MEMBRANE ADHESIVES	250
OTHER ADHESIVES NOT LISTED	50
SPECIALTY APPLICATIONS	
PVC WELDING	510
CPVC WELDING	490
ABS WELDING	325
PLASTIC CEMENT WELDING	250
ADHESIVE PRIMER FOR PLASTIC	550
CONTACT ADHESIVE	80
SPECIAL PURPOSE CONTACT ADHESIVE	250
STRUCTURAL WOOD MEMBER ADHESIVE	140
TOP & TRIM ADHESIVE	250
SUBSTRATE SPECIFIC APPLICATIONS	
METAL TO METAL	30
PLASTIC FOAMS	50
POROUS MATERIAL (EXCEPT WOOD)	50
WOOD	30
FIBERGLASS	80

1. IF AN ADHESIVE IS USED TO BOND DISSIMILAR SUBSTRATES TOGETHER, THE ADHESIVE WITH THE HIGHEST VOC CONTENT SHALL BE ALLOWED.

2. FOR ADDITIONAL INFORMATION REGARDING METHODS TO MEASURE THE VOC CONTENT SPECIFIED IN THIS TABLE, SEE SOUTH COAST AIR QUALITY MANAGEMENT DISTRICT RULE 1168.

TABLE 4.504.2 - SEALANT VOC LIMIT

(Less Water and Less Exempt Compounds in Grams per Liter)

SEALANTS	VOC LIMIT
ARCHITECTURAL	250
MARINE DECK	760
NONMEMBRANE ROOF	300
ROADWAY	250
SINGLE-PLY ROOF MEMBRANE	450
OTHER	420
SEALANT PRIMERS	
ARCHITECTURAL	
NON-POROUS	250
POROUS	775
MODIFIED BITUMINOUS	500
MARINE DECK	760
OTHER	750

TABLE 4.504.3 - VOC CONTENT LIMITS FOR ARCHITECTURAL COATINGS[2,3]

GRAMS OF VOC PER LITER OF COATING, LESS WATER & LESS EXEMPT COMPOUNDS

COATING CATEGORY	VOC LIMIT
FLAT COATINGS	50
NON-FLAT COATINGS	100
NONFLAT-HIGH GLOSS COATINGS	150
SPECIALTY COATINGS	
ALUMINUM ROOF COATINGS	400
BASEMENT SPECIALTY COATINGS	400
BITUMINOUS ROOF COATINGS	50
BITUMINOUS ROOF PRIMERS	350
BOND BREAKERS	350
CONCRETE CURING COMPOUNDS	350
CONCRETE/MASONRY SEALERS	100
DRIVEWAY SEALERS	50
DRY FOG COATINGS	150
FAUX FINISHING COATINGS	350
FIRE RESISTIVE COATINGS	350
FLOOR COATINGS	100
FORM-RELEASE COMPOUNDS	250
GRAPHIC ARTS COATINGS (SIGN PAINTS)	500
HIGH TEMPERATURE COATINGS	420
INDUSTRIAL MAINTENANCE COATINGS	250
LOW SOLIDS COATINGS[1]	120
MAGNESITE CEMENT COATINGS	450
MASTIC TEXTURE COATINGS	100
METALLIC PIGMENTED COATINGS	500
MULTICOLOR COATINGS	250
PRETREATMENT WASH PRIMERS	420
PRIMERS, SEALERS, & UNDERCOATERS	100
REACTIVE PENETRATING SEALERS	350
RECYCLED COATINGS	250
ROOF COATINGS	50
RUST PREVENTATIVE COATINGS	250
SHELLACS	
CLEAR	730
OPAQUE	550
SPECIALTY PRIMERS, SEALERS & UNDERCOATERS	100
STAINS	250
STONE CONSOLIDANTS	450
SWIMMING POOL COATINGS	340
TRAFFIC MARKING COATINGS	100
TUB & TILE REFINISH COATINGS	420
WATERPROOFING MEMBRANES	250
WOOD COATINGS	275
WOOD PRESERVATIVES	350
ZINC-RICH PRIMERS	340

1. GRAMS OF VOC PER LITER OF COATING, INCLUDING WATER & EXEMPT COMPOUNDS

2. THE SPECIFIED LIMITS REMAIN IN EFFECT UNLESS REVISED LIMITS ARE LISTED IN SUBSEQUENT COLUMNS IN THE TABLE.

3. VALUES IN THIS TABLE ARE DERIVED FROM THOSE SPECIFIED BY THE CALIFORNIA AIR RESOURCES BOARD, ARCHITECTURAL COATINGS SUGGESTED CONTROL MEASURE, FEB. 1, 2008. MORE INFORMATION IS AVAILABLE FROM THE AIR RESOURCES BOARD.

TABLE 4.504.5 - FORMALDEHYDE LIMITS[1]

MAXIMUM FORMALDEHYDE EMISSIONS IN PARTS PER MILLION

PRODUCT	CURRENT LIMIT
HARDWOOD PLYWOOD VENEER CORE	0.05
HARDWOOD PLYWOOD COMPOSITE CORE	0.05
PARTICLE BOARD	0.09
MEDIUM DENSITY FIBERBOARD	0.11
THIN MEDIUM DENSITY FIBERBOARD[2]	0.13

1. VALUES IN THIS TABLE ARE DERIVED FROM THOSE SPECIFIED BY THE CALIF. AIR RESOURCES BOARD, AIR TOXICS CONTROL MEASURE FOR COMPOSITE WOOD AS TESTED IN ACCORDANCE WITH ASTM E 1333. FOR ADDITIONAL INFORMATION, SEE CALIF. CODE OF REGULATIONS, TITLE 17, SECTIONS 93120 THROUGH 93120.12.

2. THIN MEDIUM DENSITY FIBERBOARD HAS A MAXIMUM THICKNESS OF 5/16" (8 MM).

DIVISION 4.5 ENVIRONMENTAL QUALITY (continued)
4.504.3 CARPET SYSTEMS. All carpet installed in the building interior shall meet the requirements of the California Department of Public Health, "Standard Method for the Testing and Evaluation of Volatile Organic Chemical Emissions from Indoor Sources Using Environmental Chambers," Version 1.2, January 2017 (Emission testing method for California Specification 01350)

See California Department of Public Health's website for certification programs and testing labs.

https://www.cdph.ca.gov/Programs/CCDPHP/DEODC/EHLB/IAQ/Pages/VOC.aspx.

the **4.504.3.1 Carpet cushion.** All carpet cushion installed in the building interior shall meet the requirements of California Department of Public Health, "Standard Method for the Testing and Evaluation of Volatile Organic Chemical Emissions from Indoor Sources Using Environmental Chambers," Version 1.2, January 2017 (Emission testing method for California Specification 01350)

See California Department of Public Health's website for certification programs and testing labs.

https://www.cdph.ca.gov/Programs/CCDPHP/DEODC/EHLB/IAQ/Pages/VOC.aspx.

4.504.3.2 Carpet adhesive. All carpet adhesive shall meet the requirements of Table 4.504.1.

4.504.4 RESILIENT FLOORING SYSTEMS. Where resilient flooring is installed , at least 80% of floor area receiving resilient flooring shall meet the requirements of the California Department of Public Health, "Standard Method for the Testing and Evaluation of Volatile Organic Chemical Emissions from Indoor Sources Using Environmental Chambers," Version 1.2, January 2017 (Emission testing method for California Specification 01350)

See California Department of Public Health's website for certification programs and testing labs.

hhttps://www.cdph.ca.gov/Programs/CCDPHP/DEODC/EHLB/IAQ/Pages/VOC.aspx.

4.504.5 COMPOSITE WOOD PRODUCTS. Hardwood plywood, particleboard and medium density fiberboard composite wood products used on the interior or exterior of the buildings shall meet the requirements for formaldehyde as specified in ARB's Air Toxics Control Measure for Composite Wood (17 CCR 93120 et seq.), by or before the dates specified in those sections, as shown in Table 4.504.5

4.504.5.1 Documentation. Verification of compliance with this section shall be provided as requested by the enforcing agency. Documentation shall include at least one of the following:

1. Product certifications and specifications.
2. Chain of custody certifications.
3. Product labeled and invoiced as meeting the Composite Wood Products regulation (see CCR, Title 17, Section 93120, et seq.).
4. Exterior grade products marked as meeting the PS-1 or PS-2 standards of the Engineered Wood Association, the Australian AS/NZS 2269, European 636 3S standards, and Canadian CSA 0121, CSA 0151, CSA 0153 and CSA 0325 standards.
5. Other methods acceptable to the enforcing agency.

4.505 INTERIOR MOISTURE CONTROL
4.505.1 General. Buildings shall meet or exceed the provisions of the *California Building Standards Code*.

4.505.2 CONCRETE SLAB FOUNDATIONS. Concrete slab foundations required to have a vapor retarder by California Building Code, Chapter 19, or concrete slab-on-ground floors required to have a vapor retarder by the California Residential Code, Chapter 5, shall also comply with this section.

4.505.2.1 Capillary break. A capillary break shall be installed in compliance with at least one of the following:

1. A 4-inch (101.6 mm) thick base of 1/2 inch (12.7mm) or larger clean aggregate shall be provided with a vapor barrier in direct contact with concrete and a concrete mix design, which will address bleeding, shrinkage, and curling, shall be used. For additional information, see American Concrete Institute, ACI 302.2R-06.
2. Other equivalent methods approved by the enforcing agency.
3. A slab design specified by a licensed design professional.

4.505.3 MOISTURE CONTENT OF BUILDING MATERIALS. Building materials with visible signs of water damage shall not be installed. Wall and floor framing shall not be enclosed when the framing members exceed 19 percent moisture content. Moisture content shall be verified in compliance with the following:

1. Moisture content shall be determined with either a probe-type or contact-type moisture meter.Equivalent moisture verification methods may be approved by the enforcing agency and shall satisfy requirements found in Section 101.8 of this code.
2. Moisture readings shall be taken at a point 2 feet (610 mm) to 4 feet (1219 mm) from the grade stamped end of each piece verified.
3. At least three random moisture readings shall be performed on wall and floor framing with documentation acceptable to the enforcing agency provided at the time of approval to enclose the wall and floor framing.

Insulation products which are visibly wet or have a high moisture content shall be replaced or allowed to dry prior to enclosure in wall or floor cavities. Wet-applied insulation products shall follow the manufacturers' drying recommendations prior to enclosure.

4.506 INDOOR AIR QUALITY AND EXHAUST
4.506.1 Bathroom exhaust fans. Each bathroom shall be mechanically ventilated and shall comply with the following:

1. Fans shall be ENERGY STAR compliant and be ducted to terminate outside the building.
2. Unless functioning as a component of a whole house ventilation system, fans must be controlled by a humidity control.
   a. Humidity controls shall be capable of adjustment between a relative humidity range less than or equal to 50% to a maximum of 80%. A humidity control may utilize manual or automatic means of adjustment.
   b. A humidity control may be a separate component to the exhaust fan and is not required to be integral (i.e., built-in)

Notes:

1. For the purposes of this section, a bathroom is a room which contains a bathtub, shower or tub/shower combination.
2. Lighting integral to bathroom exhaust fans shall comply with the *California Energy Code*.

4.507 ENVIRONMENTAL COMFORT
4.507.2 HEATING AND AIR-CONDITIONING SYSTEM DESIGN. Heating and air conditioning systems shall be sized, designed and have their equipment selected using the following methods:

1. The heat loss and heat gain is established according to ANSI/ACCA 2 Manual J - 2011 (Residential Load Calculation), ASHRAE handbooks or other equivalent design software or methods.
2. Duct systems are sized according to ANSI/ACCA 1 Manual D - 2014 (Residential Duct Systems), ASHRAE handbooks or other equivalent design software or methods.
3. Select heating and cooling equipment according to ANSI/ACCA 3 Manual S - 2014 (Residential Equipment Selection), or other equivalent design software or methods.

Exception: Use of alternate design temperatures necessary to ensure the system functions are acceptable.

CHAPTER 7
INSTALLER & SPECIAL INSPECTOR QUALIFICATIONS
702 QUALIFICATIONS
702.1 INSTALLER TRAINING. HVAC system installers shall be trained and certified in the proper installation of HVAC systems including ducts and equipment by a nationally or regionally recognized training or certification program. Uncertified persons may perform HVAC installations when under the direct supervision and responsibility of a person trained and certified to install HVAC systems or contractor licensed to install HVAC systems. Examples of acceptable HVAC training and certification programs include but are not limited to the following:

1. State certified apprenticeship programs.
2. Public utility training programs.
3. Training programs sponsored by trade, labor or statewide energy consulting or verification organizations.
4. Programs sponsored by manufacturing organizations.
5. Other programs acceptable to the enforcing agency.

702.2 SPECIAL INSPECTION [HCD]. When required by the enforcing agency, the owner or the responsible entity acting as the owner's agent shall employ one or more special inspectors to provide inspection or other duties necessary to substantiate compliance with this code. Special inspectors shall demonstrate competence to the satisfaction of the enforcing agency for the particular type of inspection or task to be performed. In addition to other certifications or qualifications acceptable to the enforcing agency, the following certifications or education may be considered by the enforcing agency when evaluating the qualifications of a special inspector:

1. Certification by a national or regional green building program or standard publisher.
2. Certification by a statewide energy consulting or verification organization, such as HERS raters, building performance contractors, and home energy auditors.
3. Successful completion of a third party apprentice training program in the appropriate trade.
4. Other programs acceptable to the enforcing agency.

Notes:

1. Special inspectors shall be independent entities with no financial interest in the materials or the project they are inspecting for compliance with this code.
2. HERS raters are special inspectors certified by the California Energy Commission (CEC) to rate homes in California according to the Home Energy Rating System (HERS).

[BSC] When required by the enforcing agency, the owner or the responsible entity acting as the owner's agent shall employ one or more special inspectors to provide inspection or other duties necessary to substantiate compliance with this code. Special inspectors shall demonstrate competence to the satisfaction of the enforcing agency for the particular type of inspection or task to be performed. In addition, the special inspector shall have a certification from a recognized state, national or international association, as determined by the local agency. The area of certification shall be closely related to the primary job function, as determined by the local agency.

Note: Special inspectors shall be independent entities with no financial interest in the materials or the project they are inspecting for compliance with this code.

703 VERIFICATIONS
703.1 DOCUMENTATION. Documentation used to show compliance with this code shall include but is not limited to, construction documents, plans, specifications, builder or installer certification, inspection reports, or other methods acceptable to the enforcing agency which demonstrate substantial conformance. When specific documentation or special inspection is necessary to verify compliance, that method of compliance will be specified in the appropriate section or identified applicable checklist.

PROPERTY OF THE CITY OF UPLAND
DO NOT COPY OR ALTER

LAMFEI LIN BUILDERS
A PROFESSIONAL CORPORATION
970-546-2387
lflbuilders.com

PROJECT
PROJECT NAME

PROJECT ADDRESS

CITY OF UPLAND CALIFORNIA

DISCLAIMER:

BY USING THESE PERMIT READY CONSTRUCTION DOCUMENTS, THE RECIPIENT ACKNOWLEDGES, ACCEPTS AND VOLUNTARILY AFFIRMS THE FOLLOWING CONDITIONS:

1. THE USE OF THIS INFORMATION IS RESTRICTED TO THE ORIGINAL PROJECT FOR WHICH IT WAS PREPARED FOR; THE PERMIT READY ACCESSORY DWELLING UNIT (ADU) PROGRAM FOR THE CITY OF UPLAND ONLY. THIS IS A LIMITED SET OF STANDARDIZED ADU PLANS AND SPECIFICATIONS APPROVED BY THE CITY OF UPLAND BUILDING DEPARTMENT. BUILDING CODES DO CHANGE OVER TIME AND THE RECIPIENT SHALL ENSURE FULL COMPLIANCE UNDER ALL CODES THEN IN EFFECT AT THE TIME OF THE SUBJECT PERMIT. THIS DOES NOT ELIMINATE OR REDUCE THE RECIPIENT'S RESPONSIBILITY TO VERIFY ANY AND ALL INFORMATION RELEVANT TO THE RECIPIENT'S WORK AND RESPONSIBILITY ON THIS PROJECT. LAMFEI LIN BUILDERS SHALL NOT BE RESPONSIBLE FOR TRANSLATION ERRORS. DO NOT USE THESE CONSTRUCTION DOCUMENTS IF THE PERMIT HAS EXPIRED OR IS REVOKED AT ALL.

2. THE RECIPIENT RECOGNIZES AND ACKNOWLEDGES THAT THE USE OF THIS INFORMATION WILL BE AT THEIR SOLE RISK AND WITHOUT ANY LIABILITY OR LEGAL EXPOSURE TO LAMFEI LIN BUILDERS. NO WARRANTIES OF ANY NATURE, WHETHER EXPRESS OR IMPLIED, SHALL BE ATTACHED TO THESE DOCUMENTS AND THE INFORMATION CONTAINED THEREON. ANY USE, REUSE, OR ALTERATION OF THESE DOCUMENTS BY THE RECIPIENT OR BY OTHERS WILL BE AT THE RECIPIENT'S RISK AND FULL LEGAL RESPONSIBILITY. FURTHERMORE, THE RECIPIENT WILL, TO THE FULLEST EXTENT PERMITTED BY LAW, DEFEND, INDEMNIFY, AND HOLD LAMFEI LIN BUILDERS AND ITS ENGINEER HARMLESS FROM ANY AND ALL CLAIMS, SUITS, LIABILITY, DEMANDS, JUDGEMENTS, OR CONDITIONS ARISING OUT OF OR RESULTING THEREFROM ANY USE OF THESE CONSTRUCTION DOCUMENTS FOR OR ON ACCOUNT OF ANY INJURY, DEATH, DAMAGE OR LOSS TO PERSONS OR PROPERTY, INDIRECT OR CONSEQUENTIAL DAMAGES IN ANY AMOUNT. THIS INDEMNITY DOES NOT APPLY TO THE SOLE NEGLIGENCE OR WILLFUL MISCONDUCT OF LAMFEI LIN BUILDERS OR ITS ENGINEER.

3. THE DESIGN REPRESENTED BY THESE PLANS ARE COPYRIGHTED AND ARE SUBJECT TO COPYRIGHT PROTECTION.

4. IF THE RECIPIENT DOES NOT AGREE WITH THE ABOVE CONDITIONS, DO NOT PROCEED WITH THE CONSTRUCTION OF AN ADU OR OTHER IMPROVEMENT UNDER THESE PLANS AT ALL.

OWNER
SCALE
PROJECT NO.
DATE

STYLE

DESCRIPTION
GREEN BUILDING REQUIREMENTS

SHEET
GB-2

DISCLAIMER: *THIS DOCUMENT IS PROVIDED AND INTENDED TO BE USED AS A MEANS TO INDICATE AREAS OF COMPLIANCE WITH THE CALIFORNIA GREEN BUILDING STANDARDS (CALGREEN) CODE. DUE TO THE VARIABLES BETWEEN BUILDING DEPARTMENT JURISDICTIONS, THIS CHECKLIST IS TO BE USED ON AN INDIVIDUAL PROJECT BASIS AND MAY BE MODIFIED BY THE END USER TO MEET THOSE INDIVIDUAL NEEDS. THE END USER ASSUMES ALL RESPONSIBILITY ASSOCIATED WITH THE USE OF THIS DOCUMENT, INCLUDING VERIFICATION WITH THE FULL CODE.*

TABLE R702.3.5 MINIMUM THICKNESS AND APPLICATION OF GYPSUM BOARD AND GYPSUM PANEL PRODUCTS

THICKNESS OF GYPSUM BOARD OR GYPSUM PANEL PRODUCTS (inches)	APPLICATION	ORIENTATION OF GYPSUM BOARD OR GYPSUM PANEL PRODUCTS TO FRAMING	MAXIMUM SPACING OF FRAMING MEMBERS (inches o.c.)	MAXIMUM SPACING OF FASTENERS (inches)		SIZE OF NAILS FOR APPLICATION TO WOOD FRAMING[c]
				Nails[a]	Screws[b]	
Application without adhesive						
$^3/_8$	Ceiling[d]	Perpendicular	16	7	12	13 gage, $1^1/_4$" long, $^{19}/_{64}$" head; 0.098" diameter, $1^1/_4$" long, ring shank; or 4d cooler nail, 0.080" diameter, $1^3/_8$" long, $^7/_{32}$" head.
	Wall	Either direction	16	8	16	
$^1/_2$	Ceiling	Either direction	16	7	12	13 gage, $1^3/_8$" long, $^{19}/_{64}$" head; 0.098" diameter, $1^1/_4$" long, ring shank; 5d cooler nail, 0.086" diameter, $1^5/_8$" long, $^{15}/_{64}$" head; or gypsum board nail, 0.086" diameter, $1^5/_8$" long, $^9/_{32}$" head.
	Ceiling[d]	Perpendicular	24	7	12	
	Wall	Either direction	24	8	12	
	Wall	Either direction	16	8	16	
$^5/_8$	Ceiling	Either direction	16	7	12	13 gage, $1^5/_8$" long, $^{19}/_{64}$" head; 0.098" diameter, $1^3/_8$" long, ring shank; 6d cooler nail, 0.092" diameter, $1^7/_8$" long, $^1/_4$" head; or gypsum board nail, 0.0915" diameter, $1^7/_8$" long, $^{19}/_{64}$" head.
	Ceiling	Perpendicular	24	7	12	
	Type X at garage ceiling beneath habitable rooms	Perpendicular	24	6	6	$1^7/_8$" long 0.099" diameter galvanized nails or equivalent drywall screws. Screws shall comply with Section R702.3.5.1.
	Wall	Either direction	24	8	12	13 gage, $1^5/_8$" long, $^{19}/_{64}$" head; 0.098" diameter, $1^3/_8$" long, ring shank; 6d cooler nail, 0.092" diameter, $1^7/_8$" long, $^1/_4$" head; or gypsum board nail, 0.0915" diameter, $1^7/_8$" long, $^{19}/_{64}$" head.
	Wall	Either direction	16	8	16	
Application with adhesive						
$^3/_8$	Ceiling[d]	Perpendicular	16	16	16	Same as above for $^3/_8$" gypsum board and gypsum panel products.
	Wall	Either direction	16	16	24	
$^1/_2$ or $^5/_8$	Ceiling	Either direction	16	16	16	Same as above for $^1/_2$" and $^5/_8$" gypsum board and gypsum panel products, respectively.
	Ceiling[d]	Perpendicular	24	12	16	
	Wall	Either direction	24	16	24	
Two $^3/_8$ layers	Ceiling	Perpendicular	16	16	16	Base ply nailed as above for $^1/_2$" gypsum board and gypsum panel products; face ply installed with adhesive.
	Wall	Either direction	24	24	24	

For SI: 1 inch = 25.4 mm.

a. For application without adhesive, a pair of nails spaced not less than 2 inches apart or more than $2^1/_2$ inches apart shall be permitted to be used with the pair of nails spaced 12 inches on center.

b. Screws shall be in accordance with Section R702.3.5.1. Screws for attaching gypsum board or gypsum panel products to structural insulated panels shall penetrate the wood structural panel facing not less than $^7/_{16}$ inch.

c. Where cold-formed steel framing is used with a clinching design to receive nails by two edges of metal, the nails shall be not less than $^3/_8$ inch longer than the gypsum board or gypsum panel product thickness and shall have ringed shanks. Where the cold-formed steel framing has a nailing groove formed to receive the nails, the nails shall have barbed shanks or be 0.086-inch diameter, $1^5/_8$ inches long, $^{15}/_{64}$-inch head for $^1/_2$-inch gypsum board or gypsum panel product; and 0.099-inch diameter, $1^7/_8$ inches long, $^{19}/_{64}$-inch head for $^5/_8$-inch gypsum board or gypsum panel product.

d. Three-eighths-inch-thick single-ply gypsum board or gypsum panel product shall not be used on a ceiling where a water-based textured finish is to be applied, or where it will be required to support insulation above a ceiling. On ceiling applications to receive a water-based texture material, either hand or spray applied, the gypsum board or gypsum panel product shall be applied perpendicular to framing. Where applying a water-based texture material, the minimum gypsum board thickness shall be increased from $^3/_8$ inch to $^1/_2$ inch for 16-inch on center framing, and from $^1/_2$ inch to $^5/_8$ inch for 24-inch on center framing or $^1/_2$-inch sag-resistant gypsum ceiling board shall be used.

FIRE BLOCKING MUST BE PROVIDED IN ACCORDANCE WITH CRC SECTION R302.11 AT THE FOLLOWING LOCATIONS:

a. IN CONCEALED SPACES OF STUD WALLS AND PARTITIONS, INCLUDING FURRED SPACES, AT THE CEILING LEVEL.
b. IN CONCEALED SPACES OF STUD WALLS AND PARTITIONS, INCLUDING FURRED SPACES, AT 10-FOOT INTERVALS ALONG THE LENGTH OF THE WALL.
c. AT ALL INTERCONNECTIONS BETWEEN CONCEALED VERTICAL AND HORIZONTAL SPACES SUCH AS OCCUR AT SOFFITS, DROP CEILINGS AND COVE CEILINGS.
d. AT ANNULAR OPENINGS AROUND VENTS, PIPES, DUCTS, CABLES AND WIRES AT CEILING LEVEL, WITH AN APPROVED MATERIAL TO RESIST THE FREE PASSAGE OF FLAME AND PRODUCTS OF COMBUSTION.

BEST MANAGEMENT PRACTICE AND CONSTRUCTION ACTIVITIES

JOB ADDRESS _____ PERMIT# _____

DEPARTMENT OF BUILDING AND SAFETY

STORM WATER POLLUTION CONTROL REQUIREMENTS FOR ALL DEVELOPMENT CONSTRUCTION PROJECTS / CERTIFICATION STATEMENTS

THE FOLLOWING IS INTENDED AS AN ATTACHMENT FOR CONSTRUCTION AND GRADING PLANS AND REPRESENT THE MINIMUM STANDARDS FOR GOOD HOUSEKEEPING WHICH MUST BE IMPLEMENTED ON ALL CONSTRUCTION SITES REGARDLESS OF SIZE.

DEVELOPMENT CONSTRUCTION PROJECT ARE DEFINED AS PROJECT WHERE THERE IS LESS THAN TWO ACRES OF DISTURBED SOIL, NOT LOCATED IN DESIGNATED HILLSIDE AREAS, AND NOT IN OR ADJACENT TO ENVIRONMENTAL SENSITIVE AREAS. NOTE: A PROJECT IN A DESIGNATED HILLSIDE AREA WITH LESS THAN TWO ACRES OF DISTURBED SOIL AND NOT IN OR ADJACENT TO AN ENVIRONMENTAL SENSITIVE AREA MAY BE CLASSIFIED AS A DEVELOPMENT CONSTRUCTION PROJECT IF THE GRADING PRE-INSPECTION (GPI) IS NOT REQUIRED OR THE ENTIRE LOT HAS A SLOPE OF TEN PERCENT OR LESS.

1.) ERODED SEDIMENT AND OTHER POLLUTANTS MUST BE RETAINED ON SITE AND MAY NOT BE TRANSPORTED FROM THE SITE VIA SHEET FLOW, SWELLS, AREA DRAINS, NATURAL DRAINAGE.
2.) STOCKPILES OF EARTH AND OTHER CONSTRUCTION RELATED MATERIALS MUST BE PROTECTED FROM BEING TRANSPORTED FROM THE SITE BY THE FORCE OF WIND OR WATER.
3.) FUELS, OILS, SOLVENTS AND OTHER TOXIC MATERIALS MUST BE STORED IN ACCORDANCE WITH THEIR LISTING AND ARE NOT TO CONTAMINATE THE SOIL AND SURFACE WATERS. ALL APPROVED STOCK PILES OF EARTH AND OTHER CONSTRUCTION RELATED MATERIALS MUST BE PROTECTED FROM BEING TRANSPORTED FROM THE SITE BY THE FORCES OF WIND OR WATER.
4.) STORAGE CONTAINERS ARE TO BE PROTECTED FROM THE WEATHER. SPILLS MUST BE CLEANED UP IMMEDIATELY AND DISPOSED OF IN A PROPER MANNER. SPILLS MAY NOT BE WASHED INTO THE DRAINAGE SYSTEM. EXCESS OR WASTE CONCRETE MAY NOT BE WASHED INTO THE PUBLIC WAY OR ANY OTHER DRAINAGE SYSTEM. PROVISIONS SHALL BE MADE TO RETAIN CONCRETE WASTES ON SITE UNTIL THEY CAN BE DISPOSED OF AS SOLID WASTE.
5.) TRASH AND CONSTRUCTIONS RELATED SOLID WASTES MUST BE DEPOSITED INTO A COVERED RECEPTACLE TO PREVENT CONTAMINATION OF RAIN WATER AND DISPERSAL BY WIND.
6.) SEDIMENTS AND OTHER MATERIALS MAY NOT BE TRACKED FROM THE SITE BY VEHICLE TRAFFIC. THE CONSTRUCTION ENTRANCE ROAD WAYS MUST BE STABILIZED SO AS TO INHIBIT SEDIMENTS FROM BEING DEPOSITED INTO THE PUBLIC WAY. ACCIDENTAL DEPOSITIONS MUST BE SWEPT UP IMMEDIATELY AND MAY NOT BE WASHED DOWN BY RAIN OR OTHER MEANS.
7.) ANY SLOPES WITH DISTURBED SOILS OR DENUDED OF VEGETATION MUST BE STABILIZED SO AS TO INHIBIT EROSION BY WIND AND WATER.

OTHER:

AS THE PROJECT OWNER OR AUTHORIZED AGENT OF OWNER, I HAVE READ AND UNDERSTAND THE REQUIREMENTS, LISTED ABOVE, NECESSARY TO CONTROL STORM WATER POLLUTION FROM SEDIMENTS, EROSION, CONSTRUCTION MATERIALS, I CERTIFY THAT I WILL COMPLY WITH THESE REQUIREMENTS.

PRINT NAME: _____ DATE: _____
(OWNER OR AUTHORIZED AGENT OF OWNER)

SIGNATURE: _____
(OWNER OR AUTHORIZED AGENT OF OWNER)

ADDT'L NOTES:

PROVISIONS SHALL BE MADE FOR CONTRIBUTORY DRAINAGE AT ALL TIMES.
OWNER WILL MAINTAIN DRAINAGE DEVICES AND KEEP FREE OF DEBRIS.
AN EXCAVATION / ENCROACHMENT PERMIT IS REQUIRED FOR CONSTRUCTION AND / OR DISCHARGE OF DRAINAGE WITHIN PUBLIC ROAD RIGHT-OF-WAY.
NO WORK IS ALLOWED WITHIN THE PROTECTED ZONE OF OAK TREE WITHOUT REPORT AND PERMIT.
ELEVATE THE FINISH FLOOR 6 INCHES MINIMUM ABOVE NATURAL OR FINISHED GRADE.

AS THE DESIGNEE OF RECORD, I HAVE SELECTED APPROPRIATE BMP'S TO EEFECTIVELY MINIMIZE THE NEGATIVE IMPACTS OF THIS PROJECT'S CONSTRUCTION ACTIVITIES ON STORM WATER QUALITY. THE PROJECT OWNER AND CONTRACTOR ARE AWARE THAT THE SELECTED BMP'S MUST BE INSTALLED, MONITORED, AND MAINTAINED TO ENSURE THEIR EFFECTIVENESS. THE BMP'S NOT SELECTED FOR IMPLEMENTATION ARE REDUNDANT OR DEEMED NOT APPLICABLE TO THE PROPOSED CONSTRUCTION ACTIVITIES.

NAME: ERIC NEGRETE, GRIT DESIGN GROUP, INC.
POSITION: DESIGNER
DATE:

"I CERTIFY THAT THE PROPOSED WORK WILL NOT DESTROY OR UNREASONABLY INTERFERE WITH ANY ACCESS OR UTILITY EASEMENT BELONGING TO OTHERS AND LOCATED ON MY PROPERTY, BUT IN THE EVENT SUCH WORK DOES DESTROY OR UNREASONABLY INTERFERE WIHT SUCH EASEMENT, A SUBSTITUTE EASEMENT(S) SATISFACTORY TO THE HOLDER(S) OF THE EASEMENT WILL BE PROVIDED"

_____ SIGNATURE _____ TITLE

_____ PRINT NAME _____ DATE

LAMFEI LIN BUILDERS
A PROFESSIONAL CORPORATION
970-546-2387
lflbuilders.com

PROJECT
PROJECT NAME

PROJECT ADDRESS

CITY OF UPLAND CALIFORNIA

DISCLAIMER:

BY USING THESE PERMIT READY CONSTRUCTION DOCUMENTS, THE RECIPIENT ACKNOWLEDGES, ACCEPTS AND VOLUNTARILY AFFIRMS THE FOLLOWING CONDITIONS:

1. THE USE OF THIS INFORMATION IS RESTRICTED TO THE ORIGINAL PROJECT FOR WHICH IT WAS PREPARED FOR; THE PERMIT READY ACCESSORY DWELLING UNIT (ADU) PROGRAM FOR THE CITY OF UPLAND ONLY. THIS IS A LIMITED SET OF STANDARDIZED ADU PLANS AND SPECIFICATIONS APPROVED BY THE CITY OF UPLAND BUILDING DEPARTMENT. BUILDING CODES DO CHANGE OVER TIME AND THE RECIPIENT SHALL ENSURE FULL COMPLIANCE UNDER ALL CODES THEN IN EFFECT AT THE TIME OF THE SUBJECT PERMIT. THIS DOES NOT ELIMINATE OR REDUCE THE RECIPIENT'S RESPONSIBILITY TO VERIFY ANY AND ALL INFORMATION RELEVANT TO THE RECIPIENT'S WORK AND RESPONSIBILITY ON THIS PROJECT. LAMFELI LIN BUILDERS SHALL NOT BE RESPONSIBLE FOR TRANSLATION ERRORS. DO NOT USE THESE CONSTRUCTION DOCUMENTS IF THE PERMIT HAS EXPIRED OR IS REVOKED AT ALL.

2. THE RECIPIENT RECOGNIZES AND ACKNOWLEDGES THAT THE USE OF THIS INFORMATION WILL BE AT THEIR SOLE RISK AND WITHOUT ANY LIABILITY OR LEGAL EXPOSURE TO LAMFELI LIN BUILDERS. NO WARRANTIES OF ANY NATURE, WHETHER EXPRESS OR IMPLIED, SHALL BE ATTACHED TO THESE DOCUMENTS AND THE INFORMATION CONTAINED THEREON. ANY USE, REUSE, OR ALTERATION OF THESE DOCUMENTS BY THE RECIPIENT OR BY OTHERS WILL BE AT THE RECIPIENT'S RISK AND FULL LEGAL RESPONSIBILITY. FURTHERMORE, THE RECIPIENT WILL, TO THE FULLEST EXTENT PERMITTED BY LAW, DEFEND, INDEMNIFY, AND HOLD LAMFELI LIN BUILDERS AND ITS ENGINEER HARMLESS FROM ANY AND ALL CLAIMS, SUITS, LIABILITY, DEMANDS, JUDGEMENTS, OR CONDITIONS ARISING OUT OF OR RESULTING THEREFROM ANY USE OF THESE CONSTRUCTION DOCUMENTS FOR OR ON ACCOUNT OF ANY INJURY, DEATH, DAMAGE OR LOSS TO PERSONS OR PROPERTY, INDIRECT OR CONSEQUENTIAL DAMAGES IN ANY AMOUNT. THIS INDEMNITY DOES NOT APPLY TO THE SOLE NEGLIGENCE OR WILLFUL MISCONDUCT OF LAMFELI LIN BUILDERS OR ITS ENGINEER.

3. THE DESIGN REPRESENTED BY THESE PLANS ARE COPYRIGHTED AND ARE SUBJECT TO COPYRIGHT PROTECTION.

4. IF THE RECIPIENT DOES NOT AGREE WITH THE ABOVE CONDITIONS, DO NOT PROCEED WITH THE CONSTRUCTION OF AN ADU OR OTHER IMPROVEMENT UNDER THESE PLANS AT ALL.

OWNER
SCALE
PROJECT NO.
DATE

STYLE

DESCRIPTION
BEST MANAGEMENT PRACTICES | APPLICATION OF GYPSUM BOARD | FIRE BLOCKING NOTES

SHEET
A0.0

PROPERTY OF THE CITY OF UPLAND
DO NOT COPY OR ALTER

FLOOR PLAN

¼" = 1'-0"

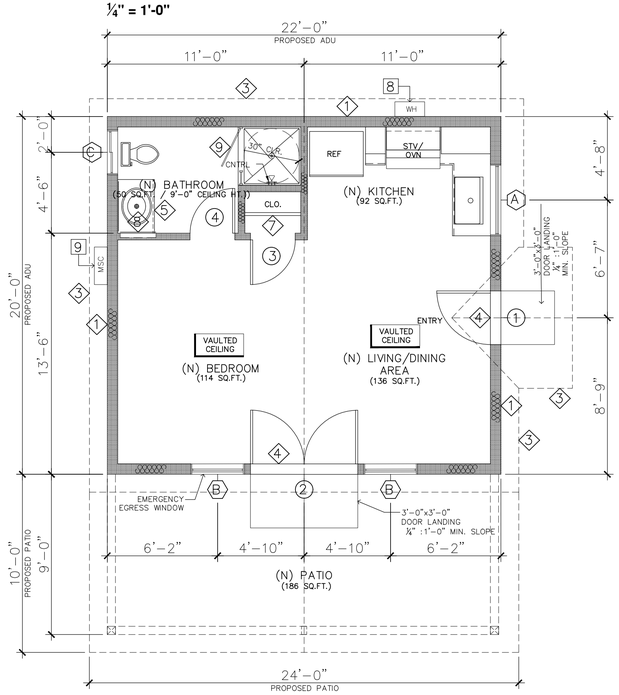

ELEVATION
SIDE VIEWS

MINIMUM ROOM DIMENSIONS (R304 & R305)

1. HABITABLE ROOMS SHALL HAVE A FLOOR AREA OF NOT LESS THAN 70 SF.
2. HABITABLE ROOMS SHALL NOT BE LESS THAN 7 FT. IN ANY HORIZONTAL DIMENSION.
3. HABITABLE SPACE AND HALLWAYS SHALL HAVE A CEILING HEIGHT OF NOT LESS THAN 7 FT. BATHROOMS, TOILET ROOMS, AND LAUNDRY ROOMS SHALL HAVE A CEILING HEIGHT OF NOT LESS THAN 6'-8".

MINIMUM BATHROOM REQ.

NOTE:
ULTRA LOW FLUSH (1.6 GALLONS MAX)
TOILET REQ.
(2016 CPC 402.2)

NOTE:
SHOWER STALL TO BE
1024 SQ.IN. MIN. INT
(2016 CPC 411.7)

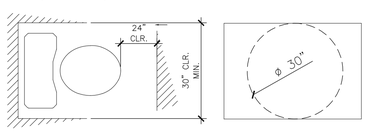

WINDOW EGRESS DETAIL

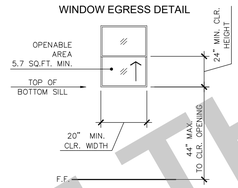

ELEVATIONS

¼" = 1'-0"

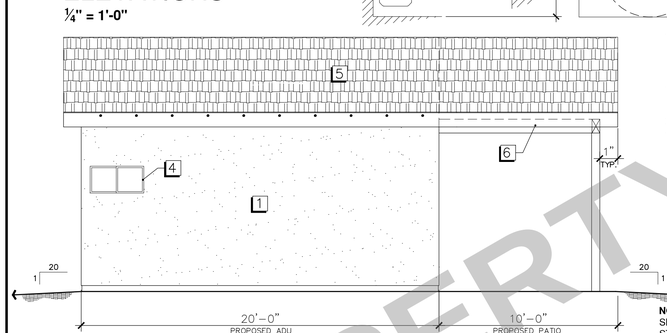

LEFT SIDE

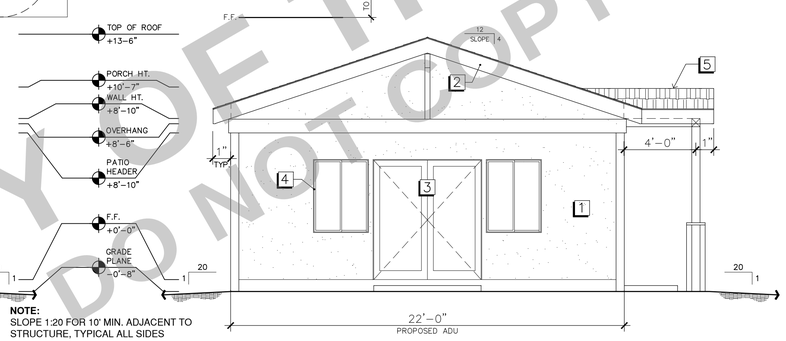

NOTE:
SLOPE 1:20 FOR 10' MIN. ADJACENT TO STRUCTURE, TYPICAL ALL SIDES

FRONT SIDE

ROOFING NOTE:
OWENS CORNING ASPHALT SHINGLE, WOODMOOR, CLASS A (ASTM E108, UL790), ICC-ES AC438, CLASS H UPLIFT (ASTM D7158) 150 MPH INSTALL WITH UNDERLAYMENT IN ACCORDANCE WITH THE MANUFACTURER S SPECIFICATIONS. CONTRACTOR TO ORDER SAMPLE TO VERIFY THIS PRODUCT MATCHES THE EXISTING MAIN RESIDENCE ROOF COVERING COLOR AND VERIFY COLOR WITH HOMEOWNER.

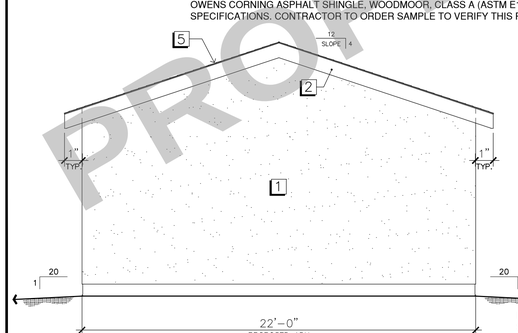

REAR SIDE

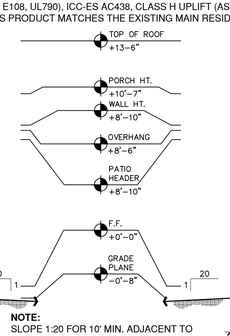

NOTE:
SLOPE 1:20 FOR 10' MIN. ADJACENT TO STRUCTURE, TYPICAL ALL SIDES

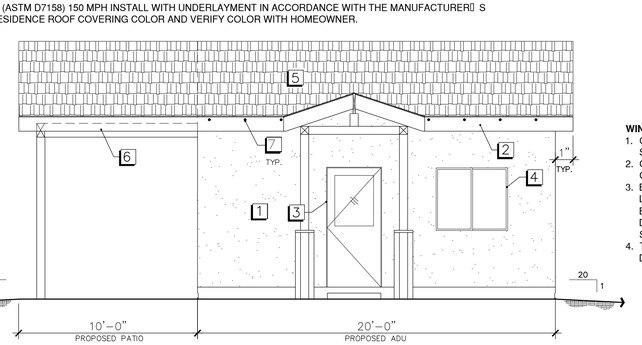

RIGHT SIDE

WINDOW NOTE:

1. GLAZING IN DOORS AND WINDOWS WITHIN 24" OF A DOOR SHALL BE SAFETY GLAZING (TEMPERED).
2. GLAZING IN WINDOWS WITHIN 18" OF THE FLOOR SHALL BE SAFETY GLAZING (TEMPERED GLASS).
3. EACH PANE OF SAFETY GLAZING INSTALLED IN HAZARDOUS LOCATIONS SHALL BE IDENTIFIED (ACID ETCHED, SAND BLASTED, CERAMIC FIRED, ETC.) BY A MANUFACTURER S DESIGNATION, THE MANUFACTURER OR INSTALLER, AND THE SAFETY GLAZING STANDARD WHICH IT COMPLIES.
4. THE LOAD RESISTANCE OF THE GLASS UNDER UNIFORM LOAD IS DETERMINED IN ACCORDANCE WITH ASTEM E1300.

ADU LIGHT & VENTILATION REQUIREMENTS

(N) ENTRY / LIVING / DINING / BEDROOM AREAS

VENTILATION REQ.		LIGHT REQ.	
WINDOWS		WINDOWS	
1- 4040	16.00 SQ.FT.	1- 4040	32.00 SQ.FT.
2- 3640	14.00 SQ.FT.	2- 3640	28.00 SQ.FT.
DOORS		DOORS (GLASS)	
1- 3068	20.00 SQ.FT.	1- 2058	11.50 SQ.FT.
2- 3068	40.00 SQ.FT.	2- 2058	23.00 SQ.FT.
TOTAL OPENABLE AREA	90.00 SQ.FT.	TOTAL GLASS AREA	94.50 SQ.FT.
TOTAL FLOOR AREA	342 SQ.FT.	TOTAL FLOOR AREA	342 SQ.FT.
26.3 % OPENABLE FOR REQ. VENT. - *OK!*		27.6 % FOR REQ. LIGHT - *OK!*	

LIGHTING: (R303)
ALL ROOMS REQUIRE NATURAL LIGHT BY MEANS OF EXTERIOR WINDOWS OR SKYLIGHTS MIN. 8% OF THE FLOOR AREA OF THE ROOM.

VENTILATION: (R303)
ALL ROOMS REQUIRE NATURAL VENTILATION BY MEANS OF OPENABLE WINDOWS MIN. 4% OF THE FLOOR AREA OF THE ROOM.

ADU ROOF VENTILATION *

ATTIC AREA TO BE VENTILATED - 77 SQ.FT.
REQUIRED VENTILATION = 77 / 150 = 0.51 SQ.IN.
0.51 x 144 = *73.44 SQ.IN.*

GABLE VENT (12" x 18")
NET FREE AREA EACH VENT = 216 SQ.IN.
AMOUNT 73.44 / 216 = 0.34
= *USE 1 GABLE VENT*

ROOF VENTILATION: (R806.2)
THE NET FREE VENTILATING AREA OF ENCLOSED ATTICS AND ENCLOSED RAFTER SPACES SHALL NOT BE LESS THAN 1/150 OF THE AREA OF THE SPACE VENTILATED. EXCEPT THAT REDUCTION OF TOTAL AREA TO 1/300 IS PERMITTED PROVIDED THAT AT LEAST 50% AND NOT MORE THAN 80% OF THE REQUIRED VENTILATING AREA IS PROVIDED BY VENTILATORS LOCATED IN THE UPPER PORTION OF THE SPACE TO BE VENTILATED AT LEAST 3- FEET ABOVE THE AVE OR CORNICE VENTS WITH THE BALANCE OF THE REQUIRED VENTILATION PROVIDED BY EAVE OR CORNICE VENTS. AS AN ALTERNATIVE, THE NET FREE CROSS-VENTILATION AREA MAY BE REDUCED TO 1/300 WHEN A CLASS I OR CLASS II VAPOR BARRIER IS INSTALLED ON THE WARM-IN-WINTER SIDE OF THE CEILING. A MINIMUM OF 1-INCH CLEARANCE SHALL BE PROVIDED BETWEEN THE INSULATION AND ROOF SHEATHING.

SCHEDULES

KEY	DIMENSION	TYPE	DESCRIPTION	QTY
1	3'-0" x 6'-8"	EXT. SWING	SOLID CORE / WOOD	1
2	3'-0" x 6'-8" x2	EXT. SWING FRENCH	SOLID CORE / WOOD	1
3	2'-6" x 6'-8"	INT. SWING	HOLLOW CORE / WOOD	1
4	2'-8" x 6'-8"	INT. SWING	HOLLOW CORE / WOOD	1

KEY	SIZE	TYPE	DESCRIPTION / COLOR / SPEC	QTY
A	4'-0" x 4'-0"	SLIDING / DUAL PANE	VINYL / WHITE / U-FACTOR = 0.30 / SHGC = 0.25	1
B	3'-0" x 4'-0"	SLIDING / DUAL PANE	VINYL / WHITE / U-FACTOR = 0.30 / SHGC = 0.25	2
C	3'-0" x 1'-6"	SLIDING / DUAL PANE (GLAZED)	VINYL / WHITE / U-FACTOR = 0.30 / SHGC = 0.25	1

NOTE: U-FACTOR & SHGC FACTOR ARE MAXIMUM VALUES, UNO IN TITLE 24 ENERGY ANALYSIS

KEY	NOTE
1	NEW EXTERIOR WALL 2x6 @ 16" STUDS W/ ⅝" GYP. BRD., ⅞" STUCCO, R-13 BATT. INSULATION
2	NEW INTERIOR WALL 2x4 @ 16" STUDS W/ ⅝" GYP. BRD., R-13 BATT. INSULATION
3	LINE OF ROOF EAVE
4	NEW DOOR OPENING W/ ½" MAX. THRESHOLD TYP. @ DOOR
5	NEW 2'-8" HIGH CABINET COUNTER WITH 4" BACK SPLASH, TYP.
6	ACCORDIAN DOOR W/ TRACK
7	SHELF AND HANGER ROD
8	MIRROR W/ MED. CAB
9	TEMPERED GLASS SHOWER DOOR

KEY	DESCRIPTION	COLOR / STYLE
1	STUCCO	TBD BY OWNER
2	WOOD TRIM	TBD BY OWNER
3	ENTRY DOOR	WOOD
4	WINDOW	WHITE
5	COMPOSITION ROOFING	COLOR TBD BY OWNER
6	PATIO COVER (OPTIONAL)	WHITE
7	EAVE VENTS REQUIRED AT EACH RAFTER BAY	
8	TANKLESS ELECT. WATER HEATER	
9	MINISPLIT CONDENSOR	
10	MINISPLIT UNIT	

ROOM	FLOOR: CARPET	FLOOR: LINOLEUM	FLOOR: COMPOSITE FLOORING	FLOOR: CERAMIC TILE	FLOOR: CONCRETE	FLOOR: TEX-O-DEK	BASE: COVERED VINYL	BASE: WOOD	BASE: TOP SET RUBBER	BASE: ELASTOMERIC	WALL: ⅝" GYP. BRD. PAINTED	WALL: ⅝" GREEN BOARD	WALL: STUCCO	WALL: PLASTER	WALL: TILE	CEILING: ⅝" GYP. BRD. / ACCOUST.	CEILING: ⅝" GYP. BRD. PAINTED	CEILING: ⅝" GREEN BOARD	CEILING: TILE	CEILING: STUCCO
ENTRY			○					○			○						○			
LIVING / DINING			○					○			○						○			
KITCHEN			○					○			○						○			
SLEEPING AREA			○					○			○						○			
BATHROOM				○				○			○	○					○	○	○	

DOORS

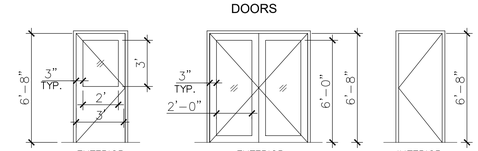

EXTERIOR SWING ①
EXTERIOR SWING ②
INTERIOR SWING ③

WINDOWS

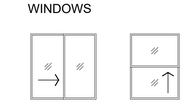

SLIDING Ⓐ Ⓒ
SINGLE HUNG Ⓑ

PROPERTY OF THE CITY OF UPLAND
DO NOT COPY OR ALTER

LAMFEI LIN BUILDERS
A PROFESSIONAL CORPORATION
970-546-2387
lflbuilders.com

PROJECT
PROJECT NAME

PROJECT ADDRESS

CITY OF UPLAND CALIFORNIA

DISCLAIMER:

BY USING THESE PERMIT READY CONSTRUCTION DOCUMENTS, THE RECIPIENT ACKNOWLEDGES, ACCEPTS AND VOLUNTARILY AFFIRMS THE FOLLOWING CONDITIONS:

1. THE USE OF THIS INFORMATION IS RESTRICTED TO THE ORIGINAL PROJECT FOR WHICH IT WAS PREPARED FOR; THE PERMIT READY ACCESSORY DWELLING UNIT (ADU) PROGRAM FOR THE CITY OF UPLAND ONLY. THIS IS A LIMITED SET OF STANDARDIZED ADU PLANS AND SPECIFICATIONS APPROVED BY THE CITY OF UPLAND BUILDING DEPARTMENT. BUILDING CODES DO CHANGE OVER TIME AND THE RECIPIENT SHALL ENSURE FULL COMPLIANCE UNDER ALL CODES THEN IN EFFECT AT THE TIME OF THE SUBJECT PERMIT. THIS DOES NOT ELIMINATE OR REDUCE THE RECIPIENT'S RESPONSIBILITY TO VERIFY ANY AND ALL INFORMATION RELEVANT TO THE RECIPIENT'S WORK AND RESPONSIBILITY ON THIS PROJECT. LAMFELI LIN BUILDERS SHALL NOT BE RESPONSIBLE FOR TRANSLATION ERRORS. DO NOT USE THESE CONSTRUCTION DOCUMENTS IF THE PERMIT HAS EXPIRED OR IS REVOKED AT ALL.

2. THE RECIPIENT RECOGNIZES AND ACKNOWLEDGES THAT THE USE OF THIS INFORMATION WILL BE AT THEIR SOLE RISK AND WITHOUT ANY LIABILITY OR LEGAL EXPOSURE TO LAMFELI LIN BUILDERS. NO WARRANTIES OF ANY NATURE, WHETHER EXPRESS OR IMPLIED, SHALL BE ATTACHED TO THESE DOCUMENTS AND THE INFORMATION CONTAINED THEREON. ANY USE, REUSE, OR ALTERATION OF THESE DOCUMENTS BY THE RECIPIENT OR BY OTHERS WILL BE AT THE RECIPIENT'S RISK AND FULL LEGAL RESPONSIBILITY. FURTHERMORE, THE RECIPIENT WILL, TO THE FULLEST EXTENT PERMITTED BY LAW, DEFEND, INDEMNIFY, AND HOLD LAMFELI LIN BUILDERS AND ITS ENGINEER HARMLESS FROM ANY AND ALL CLAIMS, SUITS, LIABILITY, DEMANDS, JUDGEMENTS, OR CONDITIONS ARISING OUT OF OR RESULTING THEREFROM ANY USE OF THESE CONSTRUCTION DOCUMENTS FOR OR ON ACCOUNT OF ANY INJURY, DEATH, DAMAGE OR LOSS TO PERSONS OR PROPERTY, INDIRECT OR CONSEQUENTIAL DAMAGES IN ANY AMOUNT. THIS INDEMNITY DOES NOT APPLY TO THE SOLE NEGLIGENCE OR WILLFUL MISCONDUCT OF LAMFELI LIN BUILDERS OR ITS ENGINEER.

3. THE DESIGN REPRESENTED BY THESE PLANS ARE COPYRIGHTED AND ARE SUBJECT TO COPYRIGHT PROTECTION.

4. IF THE RECIPIENT DOES NOT AGREE WITH THE ABOVE CONDITIONS, DO NOT PROCEED WITH THE CONSTRUCTION OF AN ADU OR OTHER IMPROVEMENT UNDER THESE PLANS AT ALL.

OWNER
SCALE
PROJECT NO.
DATE

STYLE
TRADITIONAL

DESCRIPTION
TRADITIONAL STYLE FLOOR PLAN | ELEVATIONS | SCHEDULES

SHEET
A1.0-T

FLOOR PLAN

¼" = 1'-0"

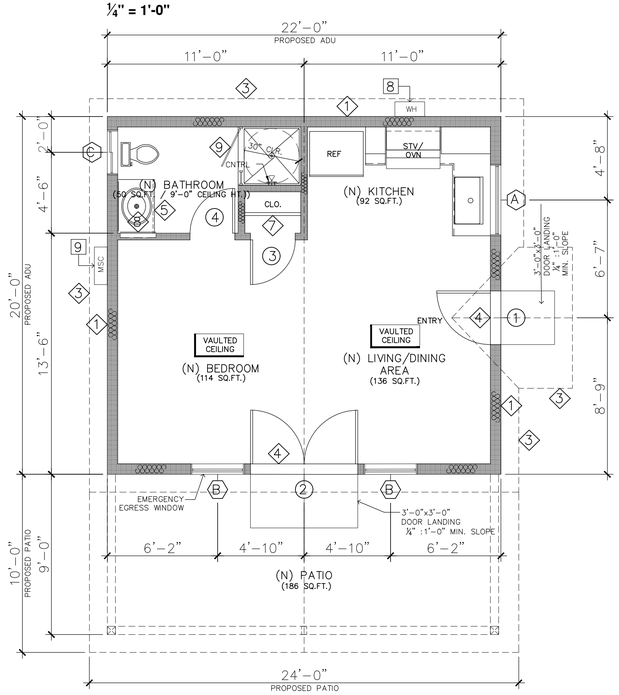

ELEVATION SIDE VIEWS

MINIMUM ROOM DIMENSIONS (R304 & R305)

1. HABITABLE ROOMS SHALL HAVE A FLOOR AREA OF NOT LESS THAN 70 SF.
2. HABITABLE ROOMS SHALL NOT BE LESS THAN 7 FT. IN ANY HORIZONTAL DIMENSION.
3. HABITABLE SPACE AND HALLWAYS SHALL HAVE A CEILING HEIGHT OF NOT LESS THAN 7 FT. BATHROOMS, TOILET ROOMS, AND LAUNDRY ROOMS SHALL HAVE A CEILING HEIGHT OF NOT LESS THAN 6'-8".

MINIMUM BATHROOM REQ.

NOTE:
ULTRA LOW FLUSH (1.6 GALLONS MAX) TOILET REQ.
(2016 CPC 402.2)

NOTE:
SHOWER STALL TO BE 1024 SQ.IN. MIN. INT
(2016 CPC 411.7)

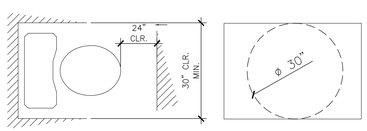

WINDOW EGRESS DETAIL

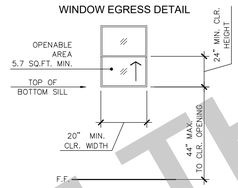

ELEVATIONS

¼" = 1'-0"

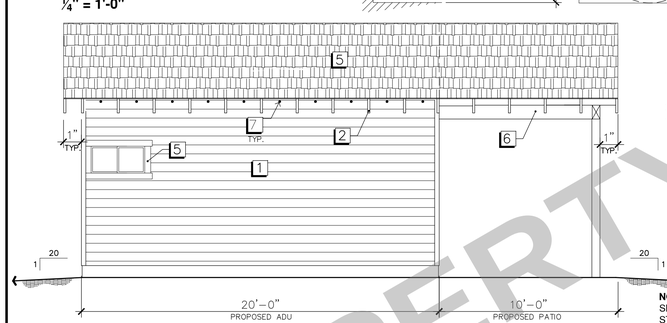

LEFT SIDE

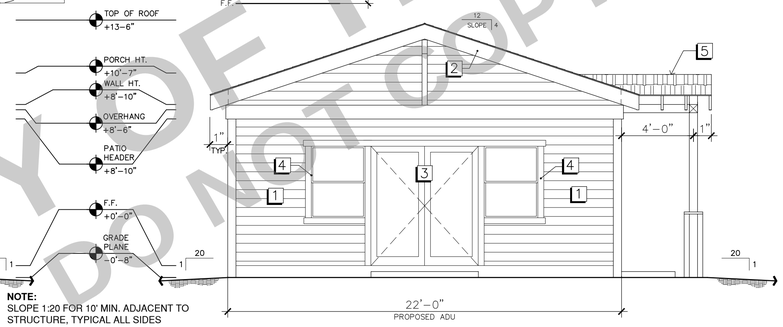

NOTE:
SLOPE 1:20 FOR 10' MIN. ADJACENT TO STRUCTURE, TYPICAL ALL SIDES

FRONT SIDE

ROOFING NOTE:
OWENS CORNING ASPHALT SHINGLE, WOODMOOR, CLASS A (ASTM E108, UL790), ICC-ES AC438, CLASS H UPLIFT (ASTM D7158) 150 MPH INSTALL WITH UNDERLAYMENT IN ACCORDANCE WITH THE MANUFACTURER S SPECIFICATIONS. CONTRACTOR TO ORDER SAMPLE TO VERIFY THIS PRODUCT MATCHES THE EXISTING MAIN RESIDENCE ROOF COVERING COLOR AND VERIFY COLOR WITH HOMEOWNER.

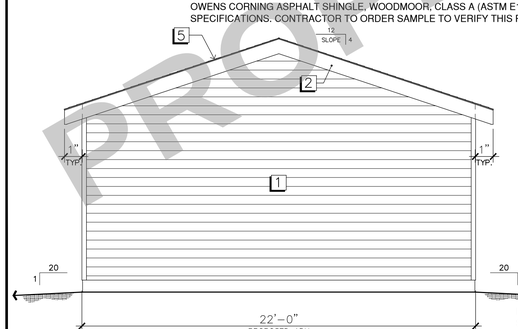

REAR SIDE

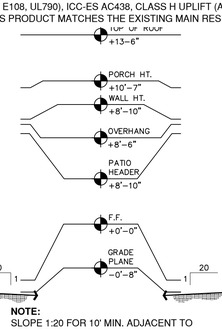

NOTE:
SLOPE 1:20 FOR 10' MIN. ADJACENT TO STRUCTURE, TYPICAL ALL SIDES

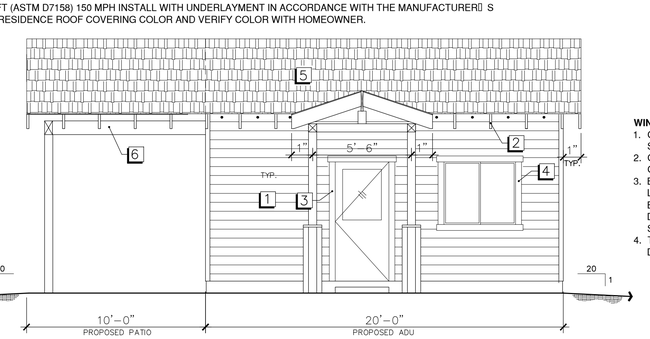

RIGHT SIDE

ADU LIGHT & VENTILATION REQUIREMENTS

(N) ENTRY / LIVING / DINING / BEDROOM AREAS

VENTILATION REQ.		LIGHT REQ.	
WINDOWS		WINDOWS	
1- 4040	16.00 SQ.FT.	1- 4040	32.00 SQ.FT.
2- 3640	14.00 SQ.FT.	2- 3640	28.00 SQ.FT.
DOORS		DOORS (GLASS)	
1- 3068	20.00 SQ.FT.	1- 2058	11.50 SQ.FT.
2- 3068	40.00 SQ.FT.	2- 2058	23.00 SQ.FT.
TOTAL OPENABLE AREA	90.00 SQ.FT.	TOTAL GLASS AREA	94.50 SQ.FT.
TOTAL FLOOR AREA	342 SQ.FT.	TOTAL FLOOR AREA	342 SQ.FT.
26.3 % OPENABLE FOR REQ. VENT. - *OK!*		27.6 % FOR REQ. LIGHT - *OK!*	

LIGHTING: (R303)
ALL ROOMS REQUIRE NATURAL LIGHT BY MEANS OF EXTERIOR WINDOWS OR SKYLIGHTS MIN. 8% OF THE FLOOR AREA OF THE ROOM.

VENTILATION: (R303)
ALL ROOMS REQUIRE NATURAL VENTILATION BY MEANS OF OPENABLE WINDOWS MIN. 4% OF THE FLOOR AREA OF THE ROOM.

ADU ROOF VENTILATION *

ATTIC AREA TO BE VENTILATED - 77 SQ.FT.
REQUIRED VENTILATION = 77 / 150 = 0.51 SQ.IN.
0.51 x 144 = *73.44 SQ.IN.*

GABLE VENT (12" x 18")
NET FREE AREA EACH VENT = 216 SQ.IN.
AMOUNT 73.44 / 216 = 0.34
= *USE 1 GABLE VENT*

ROOF VENTILATION: (R806.2)
THE NET FREE VENTILATING AREA OF ENCLOSED ATTICS AND ENCLOSED RAFTER SPACES SHALL NOT BE LESS THAN 1/150 OF THE AREA OF THE SPACE VENTILATED. EXCEPT THAT REDUCTION OF TOTAL AREA TO 1/300 IS PERMITTED PROVIDED THAT AT LEAST 50% AND NOT MORE THAN 80% OF THE REQUIRED VENTILATING AREA IS PROVIDED BY VENTILATORS LOCATED IN THE UPPER PORTION OF THE SPACE TO BE VENTILATED AT LEAST 3- FEET ABOVE THE AVE OR CORNICE VENTS WITH THE BALANCE OF THE REQUIRED VENTILATION PROVIDED BY EAVE OR CORNICE VENTS. AS AN ALTERNATIVE, THE NET FREE CROSS-VENTILATION AREA MAY BE REDUCED TO 1/300 WHEN A CLASS I OR CLASS II VAPOR BARRIER IS INSTALLED ON THE WARM-IN-WINTER SIDE OF THE CEILING. A MINIMUM OF 1-INCH CLEARANCE SHALL BE PROVIDED BETWEEN THE INSULATION AND ROOF SHEATHING.

SCHEDULES

KEY	DIMENSION	TYPE	DESCRIPTION	QTY
1	3'-0" x 6'-8"	EXT. SWING	SOLID CORE / WOOD	1
2	3'-0" x 6'-8" x2	EXT. SWING FRENCH	SOLID CORE / WOOD	1
3	2'-6" x 6'-8"	INT. SWING	HOLLOW CORE / WOOD	1
4	2'-8" x 6'-8"	INT. SWING	HOLLOW CORE / WOOD	1

KEY	SIZE	TYPE	DESCRIPTION / COLOR / SPEC	QTY
A	4'-0" x 4'-0"	SINGLE HUNG / DUAL PANE	VINYL / WHITE / U-FACTOR = 0.30 / SHGC = 0.25	1
B	3'-0" x 4'-0"	SINGLE HUNG / DUAL PANE	VINYL / WHITE / U-FACTOR = 0.30 / SHGC = 0.25	2
C	3'-0" x 1'-6"	SLIDING / DUAL PANE (GLAZED)	VINYL / WHITE / U-FACTOR = 0.30 / SHGC = 0.25	1

NOTE: U-FACTOR & SHGC FACTOR ARE MAXIMUM VALUES, UNO IN TITLE 24 ENERGY ANALYSIS

KEY	NOTE
1	NEW EXTERIOR WALL 2x6 @ 16" STUDS W/ ⅝" GYP. BRD., ⅞" STUCCO, R-13 BATT. INSULATION
2	NEW INTERIOR WALL 2x4 @ 16" STUDS W/ ⅝" GYP. BRD., R-13 BATT. INSULATION
3	LINE OF ROOF EAVE
4	NEW DOOR OPENING W/ ½" MAX. THRESHOLD TYP. @ DOOR
5	NEW 2'-8" HIGH CABINET COUNTER WITH 4" BACK SPLASH, TYP.
6	ACCORDIAN DOOR W/ TRACK
7	SHELF AND HANGER ROD
8	MIRROR W/ MED. CAB
9	TEMPERED GLASS SHOWER DOOR

KEY	DESCRIPTION	COLOR / STYLE
1	HARDIBOARD SHIPLAP SIDING	WHITE OR OLIVE GREEN
2	WOOD TRIM	WHITE / OPEN END RAFTERS
3	ENTRY DOOR	WHITE
4	WINDOW	WHITE
5	30 YR. COMPOSITION SHINGLES	COLOR 'TBD' BY OWNER
6	PATIO COVER (OPTIONAL)	WHITE
7	EAVE VENTS REQUIRED AT EACH RAFTER BAY	-
8	TANKLESS ELECT. WATER HEATER	-
9	MINISPLIT CONDENSOR	-
10	MINISPLIT UNIT	-

ROOM	FLOOR: CARPET	FLOOR: LINOLEUM	FLOOR: COMPOSITE FLOORING	FLOOR: CERAMIC TILE	FLOOR: CONCRETE	FLOOR: TEX-O-DEK	BASE: COVERED VINYL	BASE: WOOD	BASE: TOP SET RUBBER	BASE: ELASTOMERIC	WALL: ⅝" GYP. BRD. PAINTED	WALL: ⅝" GREEN BOARD	WALL: STUCCO	WALL: PLASTER	WALL: TILE	CEILING: ⅝" GYP. BRD. / ACCOUST.	CEILING: ⅝" GYP. BRD. PAINTED	CEILING: ⅝" GREEN BOARD	CEILING: TILE	CEILING: STUCCO
ENTRY			○					○			○						○			
LIVING / DINING			○					○			○						○			
KITCHEN			○					○			○						○			
SLEEPING AREA			○					○			○						○			
BATHROOM				○				○			○	○						○	○	○

DOORS

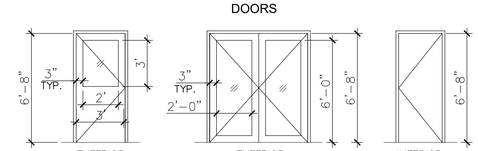

EXTERIOR SWING ①
EXTERIOR SWING ②
INTERIOR SWING ③

WINDOWS

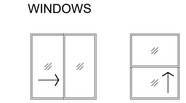

SLIDING Ⓐ Ⓒ
SINGLE HUNG Ⓑ

WINDOW NOTE:

1. GLAZING IN DOORS AND WINDOWS WITHIN 24" OF A DOOR SHALL BE SAFETY GLAZING (TEMPERED).
2. GLAZING IN WINDOWS WITHIN 18" OF THE FLOOR SHALL BE SAFETY GLAZING (TEMPERED GLASS).
3. EACH PANE OF SAFETY GLAZING INSTALLED IN HAZARDOUS LOCATIONS SHALL BE IDENTIFIED (ACID ETCHED, SAND BLASTED, CERAMIC FIRED, ETC.) BY A MANUFACTURER S DESIGNATION, THE MANUFACTURER OR INSTALLER, AND THE SAFETY GLAZING STANDARD WHICH IT COMPLIES.
4. THE LOAD RESISTANCE OF THE GLASS UNDER UNIFORM LOAD IS DETERMINED IN ACCORDANCE WITH ASTEM E1300.

PROPERTY OF THE CITY OF UPLAND
DO NOT COPY OR ALTER

LAMFEI LIN BUILDERS
A PROFESSIONAL CORPORATION
970-546-2387
lflbuilders.com

PROJECT
PROJECT NAME

PROJECT ADDRESS

CITY OF UPLAND CALIFORNIA

DISCLAIMER:

BY USING THESE PERMIT READY CONSTRUCTION DOCUMENTS, THE RECIPIENT ACKNOWLEDGES, ACCEPTS AND VOLUNTARILY AFFIRMS THE FOLLOWING CONDITIONS:

1. THE USE OF THIS INFORMATION IS RESTRICTED TO THE ORIGINAL PROJECT FOR WHICH IT WAS PREPARED FOR; THE PERMIT READY ACCESSORY DWELLING UNIT (ADU) PROGRAM FOR THE CITY OF UPLAND ONLY. THIS IS A LIMITED SET OF STANDARDIZED ADU PLANS AND SPECIFICATIONS APPROVED BY THE CITY OF UPLAND BUILDING DEPARTMENT. BUILDING CODES DO CHANGE OVER TIME AND THE RECIPIENT SHALL ENSURE FULL COMPLIANCE UNDER ALL CODES THEN IN EFFECT AT THE TIME OF THE SUBJECT PERMIT. THIS DOES NOT ELIMINATE OR REDUCE THE RECIPIENT'S RESPONSIBILITY TO VERIFY ANY AND ALL INFORMATION RELEVANT TO THE RECIPIENT'S WORK AND RESPONSIBILITY ON THIS PROJECT. LAMFELI LIN BUILDERS SHALL NOT BE RESPONSIBLE FOR TRANSLATION ERRORS. DO NOT USE THESE CONSTRUCTION DOCUMENTS IF THE PERMIT HAS EXPIRED OR IS REVOKED AT ALL.

2. THE RECIPIENT RECOGNIZES AND ACKNOWLEDGES THAT THE USE OF THIS INFORMATION WILL BE AT THEIR SOLE RISK AND WITHOUT ANY LIABILITY OR LEGAL EXPOSURE TO LAMFELI LIN BUILDERS. NO WARRANTIES OF ANY NATURE, WHETHER EXPRESS OR IMPLIED, SHALL BE ATTACHED TO THESE DOCUMENTS AND THE INFORMATION CONTAINED THEREON. ANY USE, REUSE, OR ALTERATION OF THESE DOCUMENTS BY THE RECIPIENT OR BY OTHERS WILL BE AT THE RECIPIENT'S RISK AND FULL LEGAL RESPONSIBILITY. FURTHERMORE, THE RECIPIENT WILL, TO THE FULLEST EXTENT PERMITTED BY LAW, DEFEND, INDEMNIFY, AND HOLD LAMFELI LIN BUILDERS AND ITS ENGINEER HARMLESS FROM ANY AND ALL CLAIMS, SUITS, LIABILITY, DEMANDS, JUDGEMENTS, OR CONDITIONS ARISING OUT OF OR RESULTING THEREFROM ANY USE OF THESE CONSTRUCTION DOCUMENTS FOR OR ON ACCOUNT OF ANY INJURY, DEATH, DAMAGE OR LOSS TO PERSONS OR PROPERTY, INDIRECT OR CONSEQUENTIAL DAMAGES IN ANY AMOUNT. THIS INDEMNITY DOES NOT APPLY TO THE SOLE NEGLIGENCE OR WILLFUL MISCONDUCT OF LAMFELI LIN BUILDERS OR ITS ENGINEER.

3. THE DESIGN REPRESENTED BY THESE PLANS ARE COPYRIGHTED AND ARE SUBJECT TO COPYRIGHT PROTECTION.

4. IF THE RECIPIENT DOES NOT AGREE WITH THE ABOVE CONDITIONS, DO NOT PROCEED WITH THE CONSTRUCTION OF AN ADU OR OTHER IMPROVEMENT UNDER THESE PLANS AT ALL.

OWNER
SCALE
PROJECT NO.
DATE

STYLE
CRAFTSMAN

DESCRIPTION
CRAFTSMAN STYLE FLOOR PLAN | ELEVATIONS | SCHEDULES

SHEET
A1.0-C

FLOOR PLAN

¼" = 1'-0"

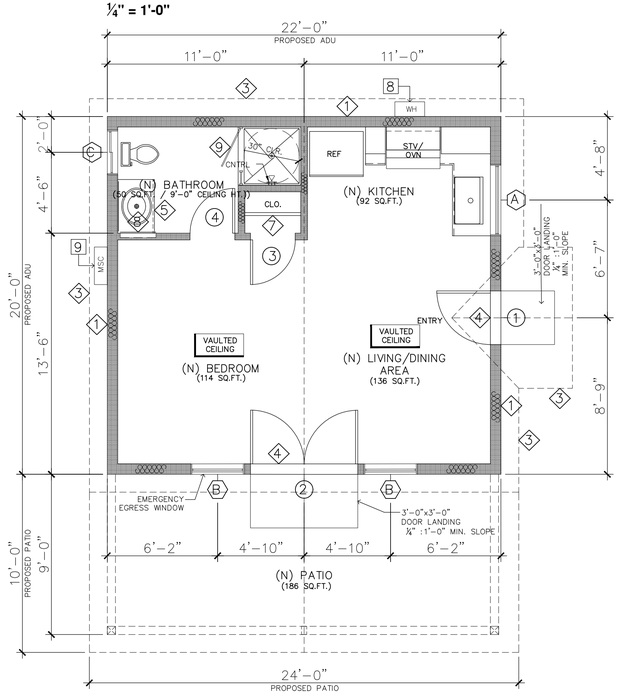

ELEVATION SIDE VIEWS

MINIMUM ROOM DIMENSIONS (R304 & R305)

1. HABITABLE ROOMS SHALL HAVE A FLOOR AREA OF NOT LESS THAN 70 SF.
2. HABITABLE ROOMS SHALL NOT BE LESS THAN 7 FT. IN ANY HORIZONTAL DIMENSION.
3. HABITABLE SPACE AND HALLWAYS SHALL HAVE A CEILING HEIGHT OF NOT LESS THAN 7 FT. BATHROOMS, TOILET ROOMS, AND LAUNDRY ROOMS SHALL HAVE A CEILING HEIGHT OF NOT LESS THAN 6'-8".

MINIMUM BATHROOM REQ.

NOTE:
ULTRA LOW FLUSH (1.6 GALLONS MAX) TOILET REQ.
(2016 CPC 402.2)

NOTE:
SHOWER STALL TO BE 1024 SQ.IN. MIN. INT
(2016 CPC 411.7)

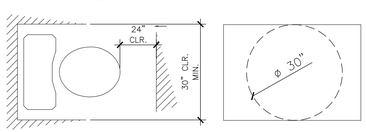

WINDOW EGRESS DETAIL

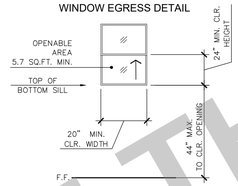

ELEVATIONS

¼" = 1'-0"

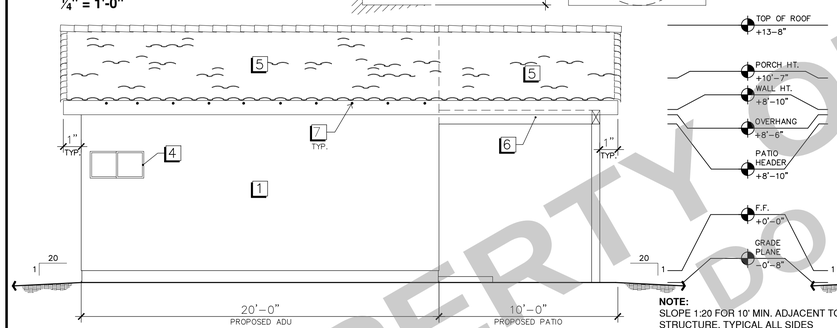

LEFT SIDE

NOTE:
SLOPE 1:20 FOR 10' MIN. ADJACENT TO STRUCTURE, TYPICAL ALL SIDES

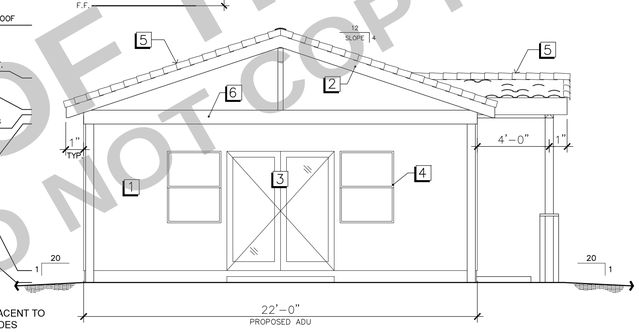

FRONT SIDE

ROOFING NOTE:
EAGLELITE CAPISTRANO LIGHT-WEIGHT ROOF TILE (5.7PSF), CLASS A (ASTM E108) TYPE I – HIGH PROFILE, IAPMO-ES ER-1900. INSTALL WITH UNDERLAYMENT IN ACCORDANCE WITH THE MANUFACTURER'S SPECIFICATIONS. CONTRACTOR TO ORDER SAMPLE TO VERIFY THIS PRODUCT MATCHES THE EXISTING MAIN RESIDENCE ROOF COVERING COLOR AND VERIFY COLOR WITH HOMEOWNER.

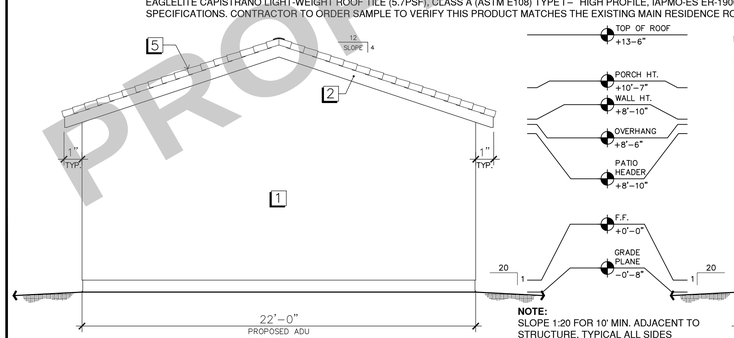

NOTE:
SLOPE 1:20 FOR 10' MIN. ADJACENT TO STRUCTURE, TYPICAL ALL SIDES

REAR SIDE

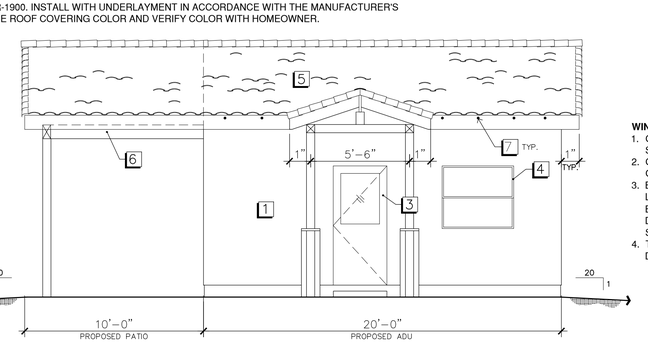

RIGHT SIDE

WINDOW NOTE:

1. GLAZING IN DOORS AND WINDOWS WITHIN 24" OF A DOOR SHALL BE SAFETY GLAZING (TEMPERED).
2. GLAZING IN WINDOWS WITHIN 18" OF THE FLOOR SHALL BE SAFETY GLAZING (TEMPERED GLASS).
3. EACH PANE OF SAFETY GLAZING INSTALLED IN HAZARDOUS LOCATIONS SHALL BE IDENTIFIED (ACID ETCHED, SAND BLASTED, CERAMIC FIRED, ETC.) BY A MANUFACTURER S DESIGNATION, THE MANUFACTURER OR INSTALLER, AND THE SAFETY GLAZING STANDARD WHICH IT COMPLIES.
4. THE LOAD RESISTANCE OF THE GLASS UNDER UNIFORM LOAD IS DETERMINED IN ACCORDANCE WITH ASTEM E1300.

ADU LIGHT & VENTILATION REQUIREMENTS

(N) ENTRY / LIVING / DINING / BEDROOM AREAS

VENTILATION REQ.

WINDOWS
1- 4040.....16.00 SQ.FT.
2- 3640.....14.00 SQ.FT.

DOORS
1- 3068.....20.00 SQ.FT.
2- 3068.....40.00 SQ.FT.

TOTAL OPENABLE AREA .....90.00 SQ.FT.
TOTAL FLOOR AREA .....342 SQ.FT.

26.3 % OPENABLE FOR REQ. VENT. - *OK!*

LIGHT REQ.

WINDOWS
1- 4040.....32.00 SQ.FT.
2- 3640.....28.00 SQ.FT.

DOORS (GLASS)
1- 2058.....11.50 SQ.FT.
2- 2058.....23.00 SQ.FT.

TOTAL GLASS AREA .....94.50 SQ.FT.
TOTAL FLOOR AREA .....342 SQ.FT.

27.6 % FOR REQ. LIGHT - *OK!*

LIGHTING: (R303)
ALL ROOMS REQUIRE NATURAL LIGHT BY MEANS OF EXTERIOR WINDOWS OR SKYLIGHTS MIN. 8% OF THE FLOOR AREA OF THE ROOM.

VENTILATION: (R303)
ALL ROOMS REQUIRE NATURAL VENTILATION BY MEANS OF OPENABLE WINDOWS MIN. 4% OF THE FLOOR AREA OF THE ROOM.

ADU ROOF VENTILATION *

ATTIC AREA TO BE VENTILATED - 77 SQ.FT.
REQUIRED VENTILATION = 77 / 150 = 0.51 SQ.IN.
0.51 x 144 = *73.44 SQ.IN.*

GABLE VENT (12" x 18")
NET FREE AREA EACH VENT = 216 SQ.IN.
AMOUNT 73.44 / 216 = 0.34
= *USE 1 GABLE VENT*

ROOF VENTILATION: (R806.2)
THE NET FREE VENTILATING AREA OF ENCLOSED ATTICS AND ENCLOSED RAFTER SPACES SHALL NOT BE LESS THAN 1/150 OF THE AREA OF THE SPACE VENTILATED. EXCEPT THAT REDUCTION OF TOTAL AREA TO 1/300 IS PERMITTED PROVIDED THAT AT LEAST 50% AND NOT MORE THAN 80% OF THE REQUIRED VENTILATING AREA IS PROVIDED BY VENTILATORS LOCATED IN THE UPPER PORTION OF THE SPACE TO BE VENTILATED AT LEAST 3- FEET ABOVE THE AVE OR CORNICE VENTS WITH THE BALANCE OF THE REQUIRED VENTILATION PROVIDED BY EAVE OR CORNICE VENTS. AS AN ALTERNATIVE, THE NET FREE CROSS-VENTILATION AREA MAY BE REDUCED TO 1/300 WHEN A CLASS I OR CLASS II VAPOR BARRIER IS INSTALLED ON THE WARM-IN-WINTER SIDE OF THE CEILING. A MINIMUM OF 1-INCH CLEARANCE SHALL BE PROVIDED BETWEEN THE INSULATION AND ROOF SHEATHING.

SCHEDULES

KEY	DIMENSION	TYPE	DESCRIPTION	QTY
1	3'-0" x 6'-8"	EXT. SWING	SOLID CORE / WOOD	1
2	3'-0" x 6'-8" x2	EXT. SWING FRENCH	SOLID CORE / WOOD	1
3	2'-6" x 6'-8"	INT. SWING	HOLLOW CORE / WOOD	1
4	2'-8" x 6'-8"	INT. SWING	HOLLOW CORE / WOOD	1

KEY	SIZE	TYPE	DESCRIPTION / COLOR / SPEC	QTY
A	4'-0" x 4'-0"	SINGLE HUNG / DUAL PANE	VINYL / WHITE / U-FACTOR = 0.30 / SHGC = 0.25	1
B	3'-0" x 4'-0"	SINGLE HUNG / DUAL PANE	VINYL / WHITE / U-FACTOR = 0.30 / SHGC = 0.25	2
C	3'-0" x 1'-6"	SLIDING / DUAL PANE (GLAZED)	VINYL / WHITE / U-FACTOR = 0.30 / SHGC = 0.25	1

NOTE: U-FACTOR & SHGC FACTOR ARE MAXIMUM VALUES, UNO IN TITLE 24 ENERGY ANALYSIS

KEY	NOTE
1	NEW EXTERIOR WALL 2x6 @ 16" STUDS W/ ⅝" GYP. BRD., ⅞" STUCCO, R-13 BATT. INSULATION
2	NEW INTERIOR WALL 2x4 @ 16" STUDS W/ ⅝" GYP. BRD., R-13 BATT. INSULATION
3	LINE OF ROOF EAVE
4	NEW DOOR OPENING W/ ½" MAX. THRESHOLD TYP. @ DOOR
5	NEW 2'-8" HIGH CABINET COUNTER WITH 4" BACK SPLASH, TYP.
6	ACCORDIAN DOOR W/ TRACK
7	SHELF AND HANGER ROD
8	MIRROR W/ MED. CAB
9	TEMPERED GLASS SHOWER DOOR

KEY	DESCRIPTION	COLOR / STYLE
1	SMOOTH STUCCO	'SWISS COFFEE' OR SIM.
2	WOOD TRIM	BROWN
3	ENTRY DOOR	WOOD
4	WINDOW	BLACK
5	LT WT CONCRETE TILE (5psf MAX.)	SPANISH RED
6	PATIO COVER (OPTIONAL)	'SWISS COFFEE' OR SIM.
7	EAVE VENTS REQUIRED AT EACH RAFTER BAY	
8	TANKLESS ELECT. WATER HEATER	
9	MINISPLIT CONDENSOR	
10	MINISPLIT UNIT	

ROOM	FLOOR: CARPET	FLOOR: LINOLEUM	FLOOR: COMPOSITE FLOORING	FLOOR: CERAMIC TILE	FLOOR: CONCRETE	FLOOR: TEX-O-DEK	BASE: COVERED VINYL	BASE: WOOD	BASE: TOP SET RUBBER	BASE: ELASTOMERIC	WALL: ⅝" GYP. BRD. PAINTED	WALL: ⅝" GREEN BOARD	WALL: STUCCO	WALL: PLASTER	WALL: TILE	CEILING: ⅝" GYP. BRD. / ACCOUST.	CEILING: ⅝" GYP. BRD. PAINTED	CEILING: ⅝" GREEN BOARD	CEILING: TILE	CEILING: STUCCO
ENTRY			○					○			○						○			
LIVING / DINING			○					○			○						○			
KITCHEN			○					○			○						○			
SLEEPING AREA			○					○			○						○			
BATHROOM				○				○			○	○					○	○	○	

DOORS

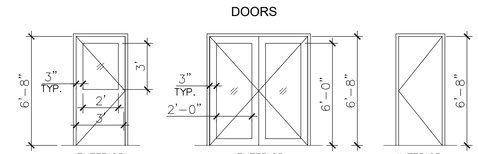

EXTERIOR SWING ①

EXTERIOR SWING ②

INTERIOR SWING ③

WINDOWS

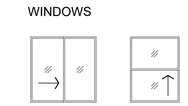

SLIDING Ⓐ Ⓒ

SINGLE HUNG Ⓑ

PROPERTY OF THE CITY OF UPLAND
DO NOT COPY OR ALTER

LAMFEI LIN BUILDERS
A PROFESSIONAL CORPORATION
970-546-2387
lflbuilders.com

PROJECT
PROJECT NAME

PROJECT ADDRESS

CITY OF UPLAND CALIFORNIA

DISCLAIMER:

BY USING THESE PERMIT READY CONSTRUCTION DOCUMENTS, THE RECIPIENT ACKNOWLEDGES, ACCEPTS AND VOLUNTARILY AFFIRMS THE FOLLOWING CONDITIONS:

1. THE USE OF THIS INFORMATION IS RESTRICTED TO THE ORIGINAL PROJECT FOR WHICH IT WAS PREPARED FOR; THE PERMIT READY ACCESSORY DWELLING UNIT (ADU) PROGRAM FOR THE CITY OF UPLAND ONLY. THIS IS A LIMITED SET OF STANDARDIZED ADU PLANS AND SPECIFICATIONS APPROVED BY THE CITY OF UPLAND BUILDING DEPARTMENT. BUILDING CODES DO CHANGE OVER TIME AND THE RECIPIENT SHALL ENSURE FULL COMPLIANCE UNDER ALL CODES THEN IN EFFECT AT THE TIME OF THE SUBJECT PERMIT. THIS DOES NOT ELIMINATE OR REDUCE THE RECIPIENT'S RESPONSIBILITY TO VERIFY ANY AND ALL INFORMATION RELEVANT TO THE RECIPIENT'S WORK AND RESPONSIBILITY ON THIS PROJECT. LAMFELI LIN BUILDERS SHALL NOT BE RESPONSIBLE FOR TRANSLATION ERRORS. DO NOT USE THESE CONSTRUCTION DOCUMENTS IF THE PERMIT HAS EXPIRED OR IS REVOKED AT ALL.

2. THE RECIPIENT RECOGNIZES AND ACKNOWLEDGES THAT THE USE OF THIS INFORMATION WILL BE AT THEIR SOLE RISK AND WITHOUT ANY LIABILITY OR LEGAL EXPOSURE TO LAMFELI LIN BUILDERS. NO WARRANTIES OF ANY NATURE, WHETHER EXPRESS OR IMPLIED, SHALL BE ATTACHED TO THESE DOCUMENTS AND THE INFORMATION CONTAINED THEREON. ANY USE, REUSE, OR ALTERATION OF THESE DOCUMENTS BY THE RECIPIENT OR BY OTHERS WILL BE AT THE RECIPIENT'S RISK AND FULL LEGAL RESPONSIBILITY. FURTHERMORE, THE RECIPIENT WILL, TO THE FULLEST EXTENT PERMITTED BY LAW, DEFEND, INDEMNIFY, AND HOLD LAMFELI LIN BUILDERS AND ITS ENGINEER HARMLESS FROM ANY AND ALL CLAIMS, SUITS, LIABILITY, DEMANDS, JUDGEMENTS, OR CONDITIONS ARISING OUT OF OR RESULTING THEREFROM ANY USE OF THESE CONSTRUCTION DOCUMENTS FOR OR ON ACCOUNT OF ANY INJURY, DEATH, DAMAGE OR LOSS TO PERSONS OR PROPERTY, INDIRECT OR CONSEQUENTIAL DAMAGES IN ANY AMOUNT. THIS INDEMNITY DOES NOT APPLY TO THE SOLE NEGLIGENCE OR WILLFUL MISCONDUCT OF LAMFELI LIN BUILDERS OR ITS ENGINEER.

3. THE DESIGN REPRESENTED BY THESE PLANS ARE COPYRIGHTED AND ARE SUBJECT TO COPYRIGHT PROTECTION.

4. IF THE RECIPIENT DOES NOT AGREE WITH THE ABOVE CONDITIONS, DO NOT PROCEED WITH THE CONSTRUCTION OF AN ADU OR OTHER IMPROVEMENT UNDER THESE PLANS AT ALL.

OWNER
SCALE
PROJECT NO.
DATE

STYLE
SPANISH

DESCRIPTION
SPANISH STYLE FLOOR PLAN | ELEVATIONS | SCHEDULES

SHEET
A1.0-S

TYPICAL UTILITY NOTES

CALIFORNIA PLUMBING CODE

1. **THE SEWER/DRAIN LINE FOR THE APPROVED ADU MUST BE LOCATED ON THE LOT IT SERVES AND CONNECTED TO THE PROPERTY'S MAIN LATERAL SEWER/DRAIN LINE PRIOR TO THE MAIN SEWER/DRAIN LINE CONNECTION TO THE EXISTING MAIN RESIDENCE.**

2. NEW FIXTURES SHALL MEET THE FOLLOWING WATER CONSERVATION PROVISIONS:

-	SHOWER HEADS	1.8 GPM @ 80 PSI
-	LAVATORY FAUCETS	1.2 GPM @ 60 PSI MAXIMUM
		0.8 GPM @ 20 PSI MINIMUM
-	KITCHEN FAUCETS	1.8 GPM @ 60 PSI
-	WATER CLOSETS	1.28 GAL/FLUSH

3. SHOWER DOORS SHALL BE TEMPERED GLASS AND SWING OUT.

4. ALL HOSE BIBS MUST BE PROTECTED BY AN ANTI SIPHON DEVICE.

5. ANTI-SCALDING OR THERMOSTATIC MIXING VALVES ARE REQUIRED AT SHOWERS AND TUB/SHOWER COMBINATIONS.

6. WATER PIPING MATERIALS WITHIN A BUILDING SHALL BE IN ACCORDANCE WITH CPC SECTION 604.1.2 OF THE CALIFORNIA PLUMBING CODE. PEX, CPVC AND OTHER PLASTIC WATER PIPING SYSTEMS SHALL BE INSTALLED IN ACCORDANCE WITH THE REQUIREMENTS OF SECTION 604.1.2 OF THE CPC, INSTALLATION STANDARDS OF APPENDIX I OF THE CPC AND MANUFACTURERS RECOMMENDED INSTALLATION STANDARDS. CPVC WATER PIPING REQUIRES A CERTIFICATION OF COMPLIANCE AS SPECIFIED IN SEC 604.1.1 OF THE CPC PRIOR TO PERMIT ISSUANCE.

7. WATER HEATERS SHALL HAVE A TEMPERATURE AND PRESSURE RELIEF VALVE. THE POINT OF DISCHARGE FOR RELIEF VALVE SHALL BE IN ACCORDANCE WITH CPC SECTION 608.7.

CALIFORNIA MECHANICAL CODE

1. A DOMESTIC CLOTHES DRYER DUCT SHALL BE OF METAL AND A MINIMUM OF 4" IN DIAMETER. THE EXHAUST DUCT SHALL NOT EXCEED A TOTAL COMBINED HORIZONTAL AND VERTICAL LENGTH OF 14', INCLUDING TWO 90-DEGREE ELBOWS. TWO FEET SHALL BE DEDUCTED FOR EACH 90-DEGREE ELBOW IN EXCESS OF TWO. **THE DRYER SHALL BE VENTED TO THE OUTSIDE AIR.**

2. A DRYER COMPARTMENT/CLOSET SHALL BE PROVIDED WITH A MINIMUM OPENING OF 100 SQUARE INCHES FOR MAKEUP AIR IN THE DOOR OR BY OTHER APPROVED MEANS.

3. CONDENSATE LINES FROM MECHANICAL EQUIPMENT SHALL DISCHARGE TO A PLUMBING FIXTURE OR STORM DRAIN BY MEANS OF AN INDIRECT WASTE PIPE. CONDENSATE LINES SHALL NOT TERMINATE IN LANDSCAPE OR YARD AREAS.

4. WHEN APPROVED, THE ENGINEER OF RECORD, ARCHITECT OR PLANS PREPARER SHALL PROVIDE MANUFACTURER'S DETAILS AND SPECIFICATIONS FOR VENTING OF TANKLESS WATER HEATERS.

CALIFORNIA ELECTRICAL CODE

1. THE ENGINEER OF RECORD, ARCHITECT OR PLANS PREPARER SHALL PROVIDE DETAILS TO THE CITY INSPECTOR, UPON REQUEST, SHOWING THE LOCATION AND SIZE OF THE MAIN SERVICE PANEL (MSP) AND THE SOURCE OF POWER FOR THE APPROVED ADU.

2. SMOKE ALARMS SHALL BE INSTALLED AT THE FOLLOWING LOCATIONS:

   a. OUTSIDE EACH SEPARATE SLEEPING AREA IN THE IMMEDIATE VICINITY OF BEDROOMS.
   b. IN EACH ROOM USED FOR SLEEPING PURPOSES.
   c. SMOKE ALARMS SHALL BE INTERCONNECTED SUCH THAT THE ACTUATION OF ONE SMOKE ALARM ACTIVATES ALL ALARMS.
   d. SMOKE ALARMS SHALL RECEIVE THEIR PRIMARY POWER FROM THE BUILDING'S WIRING WITH BATTERY BACKUP.
   e. APPROVED COMBINED SMOKE ALARMS AND CARBON MONOXIDE ALARMS ARE ACCEPTABLE.

APPROVED CARBON MONOXIDE ALARMS SHALL BE INSTALLED IN DWELLING UNITS AND IN SLEEPING UNITS AT THE FOLLOWING LOCATIONS:

   a. CARBON MONOXIDE ALARMS SHALL RECEIVE THEIR PRIMARY POWER FROM THE BUILDING'S WIRING WITH BATTERY BACKUP.
   b. CARBON MONOXIDE ALARMS SHALL BE INTERCONNECTED SUCH THAT THE ACTUATION OF ONE CO ALARM ACTIVATES ALL CO ALARMS.
   c. LOCATE CARBON MONOXIDE ALARMS OUTSIDE EACH SLEEPING AREA IN THE IMMEDIATE VICINITY OF THE BEDROOMS.
   d. LOCATED CARBON MONOXIDE ALARMS ON EVERY LEVEL OF A DWELLING UNIT.
   e. APPROVED COMBINED SMOKE ALARMS AND CARBON MONOXIDE ALARMS ARE ACCEPTABLE.

4. RECEPTACLES WILL BE PROVIDED AROUND THE PERIMETER OF HABITABLE ROOMS SO THAT A RECEPTACLE IS LOCATED WITHIN 6 FEET FROM ANY POINT ALONG THE WALL, INCLUDING ONE ON WALLS 2 FEET AND WIDER.

5. ALL KITCHEN AND DINING AREA COUNTERS RECEPTACLES SHALL BE INSTALLED AT ALL COUNTER SPACES 12 INCHES OR WIDER, LOCATED SO THAT NO POINT, MEASURED ALONG THE WALL, IS MORE THAN 24 INCHES FROM A RECEPTACLE. RECEPTACLES SERVING ISLANDS OR PENINSULAS COUNTERS SHALL BE ABOVE OR WITHIN 12 INCHES BELOW THE TOP AND LOCATED SO THAT NO POINT IS MORE THAN 24 INCHES FROM AN OUTLET.

6. A RECEPTACLE SHALL BE INSTALLED IN HALLWAYS MORE THAN 10 FEET IN LENGTH.

7. AT LEAST ONE WALL SWITCH-CONTROLLED LIGHTING OUTLET (FIXTURE) SHALL BE INSTALLED IN EVERY HABITABLE ROOM, BATHROOM AND HALLWAY WITH ELECTRICAL POWER, AND AT ALL EXTERIOR DOORS.

8. RECEPTACLES SHALL BE INSTALLED IN THE FRONT AND REAR YARDS OF THE DWELLING AND SHALL BE PROTECTED WITH A GFCI AND WATERPROOF.

9. ALL RECEPTACLES IN/NEAR BATHROOM, OUTDOORS, KITCHEN (WHERE RECEPTACLES SERVE COUNTER TOP SURFACES), SINKS, BATHTUBS AND LAUNDRY AREAS SHALL HAVE GROUND-FAULT CIRCUIT-INTERRUPTER (GFCI) PROTECTION.

10. ALL BRANCH CIRCUITS SUPPLYING RECEPTACLES IN KITCHENS, FAMILY ROOMS, DINING ROOMS, LIVING ROOMS, PARLORS, LIBRARIES, DENS, BEDROOMS, SUNROOMS, RECREATION ROOMS, CLOSETS, HALLWAYS AND SIMILAR ROOMS OR AREAS SHALL BE PROTECTED BY A LISTED ARC-FAULT CIRCUIT INTERRUPTER (AFCI).

11. IN EVERY DWELLING UNIT, FIXED APPLIANCES SUCH AS FOOD WASTE GRINDERS, DISHWASHERS, WASHING MACHINES, DRYERS, LAUNDRY TRAY LOCATIONS, BUILT-IN REFRIGERATORS OR FREEZERS, FURNACES, AC UNITS, BUILT-IN HEATERS OR ANY OTHER FIXED APPLIANCE WITH A MOTOR OF ¼ H.P. OR LARGER SHALL BE ON A SEPARATE 20 AMP. BRANCH CIRCUIT.

12. RECEPTACLES SHALL BE LISTED AS TAMPER-RESISTANT FOR ***ALL*** 15 AND 20 AMPERE RECEPTACLES IN DWELLING UNIT FAMILY, DINING, LIVING, PARLORS, LIBRARIES, DENS, BEDROOMS, SUNROOMS, RECREATION ROOMS, CLOSETS, HALLWAYS, OR SIMILAR ROOMS AND AREAS.

13. 120-VOLT RECEPTACLE SHALL BE LOCATED WITHIN 25' OF THE EQUIPMENT FOR SERVICE AND MAINTENANCE PURPOSES.

14. AN APPROVED INDEPENDENT ELECTRICAL DISCONNECT IS REQUIRED FOR EACH PIECE OF EQUIPMENT WITHIN SIGHT OF THE EQUIPMENT, WHEN SUPPLY VOLTAGE IS GREATER THAN 50 VOLTS.

15. THE KITCHEN SHALL BE PROVIDED WITH A MINIMUM OF TWO OR MORE 20AMP SMALL APPLIANCE BRANCH CIRCUITS.

16. LAUNDRY AREAS SHALL BE PROVIDED WITH AT LEAST ONE 20AMP BRANCH CIRCUIT.

17. BATHROOMS SHALL BE PROVIDED WITH ONE OR MORE 20AMP BRANCH CIRCUITS.

18. LIGHTING CONTROL FOR BEDROOMS, FAMILY ROOM, OFFICE, GAME ROOM, AND KITCHEN TO BE ON DIMMERS.

19. LIGHTING CONTROL FOR BATHROOMS TO BE ON VACANCY SENSORS.

20. ALL EXTERIOR LIGHTING TO BE CONTROLLED BY PHOTO SENSOR TO TURN OFF WITH SUNLIGHT OR TIMER.

21. CONDUCTORS NORMALLY USED TO CARRY CURRENT SHALL BE OF COPPER.

22. PROVIDE UFER OR OTHER APPROVED GROUND PER CEC SECTION 250-50.

23. OUTDOOR LIGHTING SHALL BE PROVIDED AT EACH EXTERIOR DOOR.

24. A WORK LIGHT, SWITCH, AND RECEPTACLE OUTLET IS REQUIRED FOR ATTICS, WHERE THE SPACE IS USED FOR STORAGE OR CONTAIN EQUIPMENT REQUIRING SERVICING. THE LIGHTING OUTLET SHALL BE PROVIDED AT OR NEAR THE EQUIPMENT REQUIRING SERVICING.

CALIFORNIA ENERGY CODE COMMENTS

1. RECESSED LIGHTS INSTALLED IN AN INSULATED CEILING OR CAVITY ARE REQUIRED TO HAVE A ZERO CLEARANCE INSULATION COVER (IC), BE ASTM E 283 CERTIFIED THAT THEY ARE AIR TIGHT, AND SEALED WITH A GASKET OR CAULK BETWEEN THE HOUSING AND THE CEILING.

2. OUTDOOR LIGHTING ATTACHED TO A BUILDING MUST BE HIGH EFFICACY, OR CONTROLLED BY A MOTION SENSOR WITH AN INTEGRAL PHOTO-CONTROL.

3. ALL NEW GLAZING SHALL BE INSTALLED WITH LABELS TO REMAIN IN PLACE FOR INSPECTION.

4. ROOMS CONTAINING A SHOWER SHALL BE MECHANICALLY VENTILATED. A MINIMUM RATE OF 50CFM IS REQUIRED. UPON REQUEST FROM THE CITY INSPECTOR, THE ENGINEER OF RECORD, ARCHITECT OR PLANS PREPARER SHALL PROVIDE DETAILS FOR DUCTING SIZE AND LENGTHS TO MEET THE MINIMUM REQUIREMENTS OF ASHRA STANDARD 62.2 AND MAXIMUM SOUND RATING OR 3 SONE FOR INTERMITTENT OPERATION.

5. THE 2022 CGBSC MANDATORY MEASURES ARE APPLICABLE TO THIS PROJECT.

CALIFORNIA GREEN BUILDING STANDARDS CODE

1. THE CODE-REQUIRED EV CHARGING CONDUIT AND CONDUCTORS CITED IN THE CGBSC SECTION 4106.4.1 ARE APPLICABLE TO THIS PROJECT.

UTILITY LAYOUT

¼" = 1'-0"

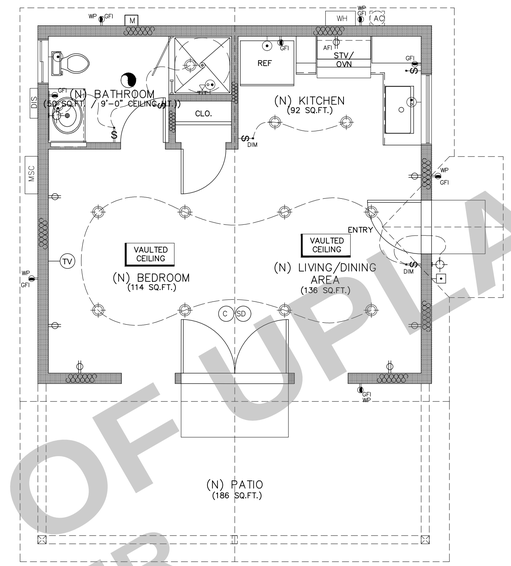

UTILITY LEGEND

	NEW WALL		HOT / COLD WATER
	DOUBLE SWITCH		COLD WATER
	SINGLE SWITCH	SD	BATTERY OPER. SMOKE DETECT.
M	ELECTRICAL PANEL / METER	C	CARBON DETECT.
G	GAS METER		HARD WIRE SMOKE DETECT. W/ BATT
	WALL FURNACE		MECH. VENT/5 AIR CHANGE
	DUPLEX OUTLET @ 15" F.F.		CHIME
C	GROUND FAULT INT. OUTLET		TELEPHONE OUTLET
WP GFI	WATER PROOF GFI OUTLET		DOOR BELL
	SINGLE SWITCH W/ POWER OUTLET	WH	TANKLESS (INSTANTANEOUS) WATER HEATER INSTALLED ON EXTERIOR WALL
	OUTLET AT 3'-6" F.F.F.	AC	AC CONDENSER
	RECESSED LIGHT	DIS	AC CONDENSER DISCONNECT
	CEILING MOUNTED LIGHT	MS	MINI-SPLIT UNIT
	WALL MOUNTED LIGHT	MSC	MINI-SPLIT CONDENSER
TH	THERMOSTAT	M	ELECTRICAL METER
TV	T.V. ANTENNA / CABLE OUTLET		

PROPERTY OF THE CITY OF UPLAND
DO NOT COPY OR ALTER

LAMFEI LIN BUILDERS
A PROFESSIONAL CORPORATION
970-546-2387
lflbuilders.com

PROJECT
PROJECT NAME

PROJECT ADDRESS

CITY OF UPLAND CALIFORNIA

DISCLAIMER:

BY USING THESE PERMIT READY CONSTRUCTION DOCUMENTS, THE RECIPIENT ACKNOWLEDGES, ACCEPTS AND VOLUNTARILY AFFIRMS THE FOLLOWING CONDITIONS:

1. THE USE OF THIS INFORMATION IS RESTRICTED TO THE ORIGINAL PROJECT FOR WHICH IT WAS PREPARED FOR; THE PERMIT READY ACCESSORY DWELLING UNIT (ADU) PROGRAM FOR THE CITY OF UPLAND ONLY. THIS IS A LIMITED SET OF STANDARDIZED ADU PLANS AND SPECIFICATIONS APPROVED BY THE CITY OF UPLAND BUILDING DEPARTMENT. BUILDING CODES DO CHANGE OVER TIME AND THE RECIPIENT SHALL ENSURE FULL COMPLIANCE UNDER ALL CODES THEN IN EFFECT AT THE TIME OF THE SUBJECT PERMIT. THIS DOES NOT ELIMINATE OR REDUCE THE RECIPIENT'S RESPONSIBILITY TO VERIFY ANY AND ALL INFORMATION RELEVANT TO THE RECIPIENT'S WORK AND RESPONSIBILITY ON THIS PROJECT. LAMFELI LIN BUILDERS SHALL NOT BE RESPONSIBLE FOR TRANSLATION ERRORS. DO NOT USE THESE CONSTRUCTION DOCUMENTS IF THE PERMIT HAS EXPIRED OR IS REVOKED AT ALL.

2. THE RECIPIENT RECOGNIZES AND ACKNOWLEDGES THAT THE USE OF THIS INFORMATION WILL BE AT THEIR SOLE RISK AND WITHOUT ANY LIABILITY OR LEGAL EXPOSURE TO LAMFELI LIN BUILDERS. NO WARRANTIES OF ANY NATURE, WHETHER EXPRESS OR IMPLIED, SHALL BE ATTACHED TO THESE DOCUMENTS AND THE INFORMATION CONTAINED THEREON. ANY USE, REUSE, OR ALTERATION OF THESE DOCUMENTS BY THE RECIPIENT OR BY OTHERS WILL BE AT THE RECIPIENT'S RISK AND FULL LEGAL RESPONSIBILITY. FURTHERMORE, THE RECIPIENT WILL, TO THE FULLEST EXTENT PERMITTED BY LAW, DEFEND, INDEMNIFY, AND HOLD LAMFELI LIN BUILDERS AND ITS ENGINEER HARMLESS FROM ANY AND ALL CLAIMS, SUITS, LIABILITY, DEMANDS, JUDGEMENTS, OR CONDITIONS ARISING OUT OF OR RESULTING THEREFROM ANY USE OF THESE CONSTRUCTION DOCUMENTS FOR OR ON ACCOUNT OF ANY INJURY, DEATH, DAMAGE OR LOSS TO PERSONS OR PROPERTY, INDIRECT OR CONSEQUENTIAL DAMAGES IN ANY AMOUNT. THIS INDEMNITY DOES NOT APPLY TO THE SOLE NEGLIGENCE OR WILLFUL MISCONDUCT OF LAMFELI LIN BUILDERS OR ITS ENGINEER.

3. THE DESIGN REPRESENTED BY THESE PLANS ARE COPYRIGHTED AND ARE SUBJECT TO COPYRIGHT PROTECTION.

4. IF THE RECIPIENT DOES NOT AGREE WITH THE ABOVE CONDITIONS, DO NOT PROCEED WITH THE CONSTRUCTION OF AN ADU OR OTHER IMPROVEMENT UNDER THESE PLANS AT ALL.

OWNER
SCALE
PROJECT NO.
DATE

STYLE

DESCRIPTION
UTILITY LAYOUT PLAN & NOTES

SHEET
UT-1

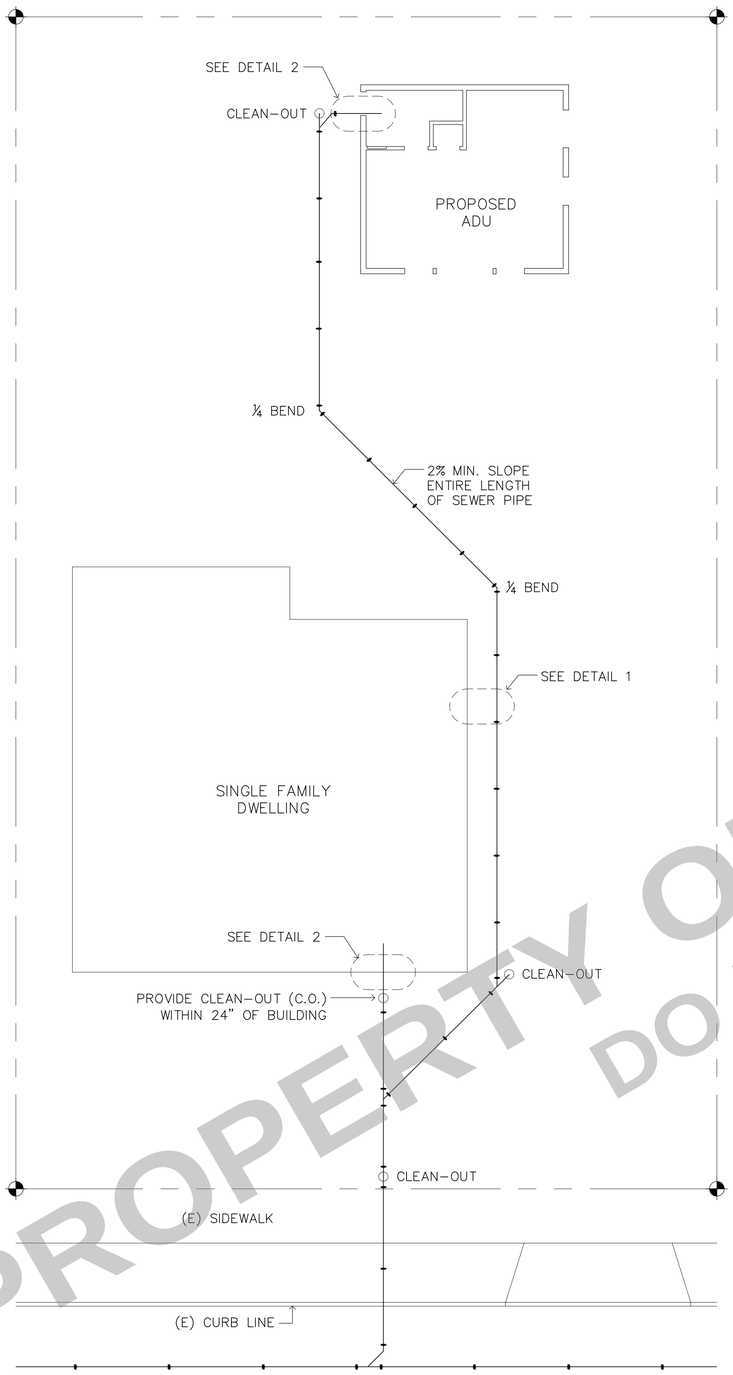

SEWER TYPICAL ON LOT
N.T.S.

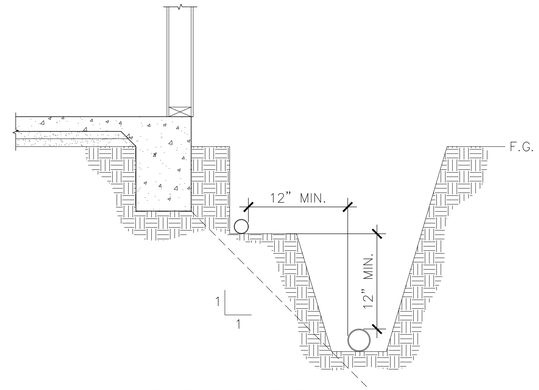

FOOTING PARALLEL TO CONDUIT

DETAIL 1

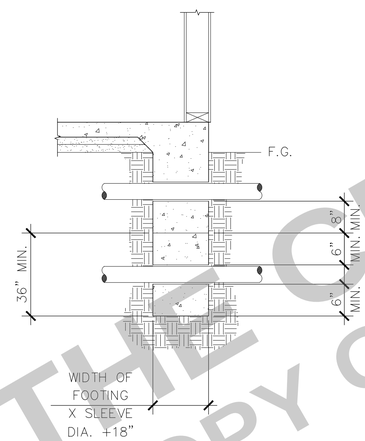

FOOTING PERPENDICULAR TO CONDUIT

DETAIL 2

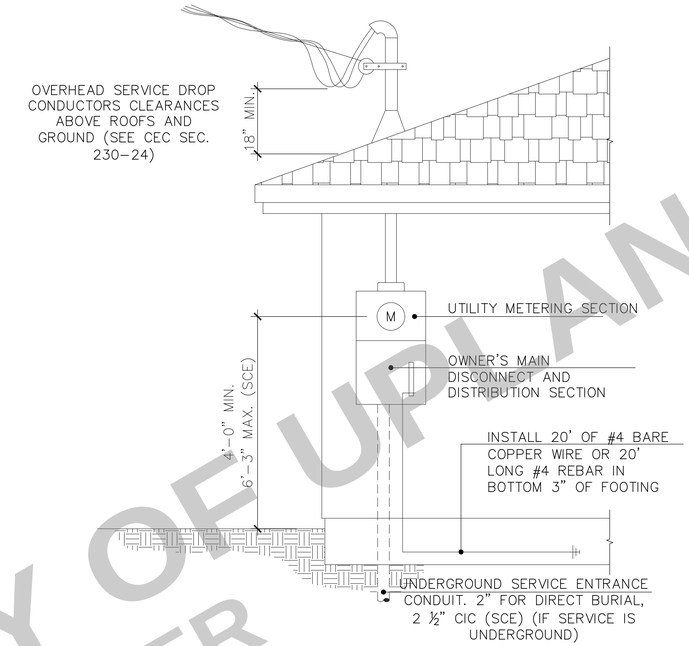

3 WIRE, 1 Ø AMP RATING OF SERVICE	SIZE OF SERVICE ENTRANCE CONDUCTOR (THW)		STEEL RIGID GALVANIZED CONDUIT SIZE FOR OVERHEAD SERVICE			GROUNDING ELECTRODE CONDUCTOR	
	COPPER	ALUMINUM	CU COND.	AL COND.	MAX. HT.		
100	#4	#2	1 ¼"	1 ¼"	30"	#8	#6
125	#2	1/0	1 ¼"	1 ½"	40"	#8	#6
150	#1	2/0	1 ¼"	1 ½"	40"	#6	#4
175	1/0	3/0	1 ½"	2"	60"	#6	#4
200	2/0	4/0	1 ½"	2"	60"	#4	#2

MINIMUM 100 AMP RESIDENTIAL SERVICE. ALL ELECTRICAL EQUIPMENT SHALL BE LISTED BY AN APPROVED TESTING AGENCY.

ELECTRICAL SERVICE PANEL DETAIL

NOTE: THE NUMBER OF PV PANELS SHOWN ON THIS PLAN ARE REPRESENTATIVE OF THE SYSTEM LOCATION ONLY

CONSTRUCT 2.91kw (MIN.)
PV SOLAR PANEL SYSTEM PER CF1R TITLE 24
REQUIREMENTS CEnC, EQUATEION 150.1-C

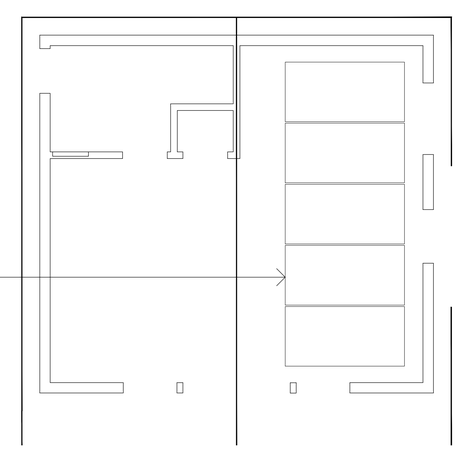

SOLAR SYSTEM LAYOUT
N.T.S.

PROPERTY OF THE CITY OF UPLAND
DO NOT COPY OR ALTER

LAMFEI LIN BUILDERS
A PROFESSIONAL CORPORATION
970-546-2387
lflbuilders.com

PROJECT
PROJECT NAME

PROJECT ADDRESS

CITY OF UPLAND CALIFORNIA

DISCLAIMER:

BY USING THESE PERMIT READY CONSTRUCTION DOCUMENTS, THE RECIPIENT ACKNOWLEDGES, ACCEPTS AND VOLUNTARILY AFFIRMS THE FOLLOWING CONDITIONS:

1. THE USE OF THIS INFORMATION IS RESTRICTED TO THE ORIGINAL PROJECT FOR WHICH IT WAS PREPARED FOR; THE PERMIT READY ACCESSORY DWELLING UNIT (ADU) PROGRAM FOR THE CITY OF UPLAND ONLY. THIS IS A LIMITED SET OF STANDARDIZED ADU PLANS AND SPECIFICATIONS APPROVED BY THE CITY OF UPLAND BUILDING DEPARTMENT. BUILDING CODES DO CHANGE OVER TIME AND THE RECIPIENT SHALL ENSURE FULL COMPLIANCE UNDER ALL CODES THEN IN EFFECT AT THE TIME OF THE SUBJECT PERMIT. THIS DOES NOT ELIMINATE OR REDUCE THE RECIPIENT'S RESPONSIBILITY TO VERIFY ANY AND ALL INFORMATION RELEVANT TO THE RECIPIENT'S WORK AND RESPONSIBILITY ON THIS PROJECT. LAMFELI LIN BUILDERS SHALL NOT BE RESPONSIBLE FOR TRANSLATION ERRORS. DO NOT USE THESE CONSTRUCTION DOCUMENTS IF THE PERMIT HAS EXPIRED OR IS REVOKED AT ALL.

2. THE RECIPIENT RECOGNIZES AND ACKNOWLEDGES THAT THE USE OF THIS INFORMATION WILL BE AT THEIR SOLE RISK AND WITHOUT ANY LIABILITY OR LEGAL EXPOSURE TO LAMFELI LIN BUILDERS. NO WARRANTIES OF ANY NATURE, WHETHER EXPRESS OR IMPLIED, SHALL BE ATTACHED TO THESE DOCUMENTS AND THE INFORMATION CONTAINED THEREON. ANY USE, REUSE, OR ALTERATION OF THESE DOCUMENTS BY THE RECIPIENT OR BY OTHERS WILL BE AT THE RECIPIENT'S RISK AND FULL LEGAL RESPONSIBILITY. FURTHERMORE, THE RECIPIENT WILL, TO THE FULLEST EXTENT PERMITTED BY LAW, DEFEND, INDEMNIFY, AND HOLD LAMFELI LIN BUILDERS AND ITS ENGINEER HARMLESS FROM ANY AND ALL CLAIMS, SUITS, LIABILITY, DEMANDS, JUDGEMENTS, OR CONDITIONS ARISING OUT OF OR RESULTING THEREFROM ANY USE OF THESE CONSTRUCTION DOCUMENTS FOR OR ON ACCOUNT OF ANY INJURY, DEATH, DAMAGE OR LOSS TO PERSONS OR PROPERTY, INDIRECT OR CONSEQUENTIAL DAMAGES IN ANY AMOUNT. THIS INDEMNITY DOES NOT APPLY TO THE SOLE NEGLIGENCE OR WILLFUL MISCONDUCT OF LAMFELI LIN BUILDERS OR ITS ENGINEER.

3. THE DESIGN REPRESENTED BY THESE PLANS ARE COPYRIGHTED AND ARE SUBJECT TO COPYRIGHT PROTECTION.

4. IF THE RECIPIENT DOES NOT AGREE WITH THE ABOVE CONDITIONS, DO NOT PROCEED WITH THE CONSTRUCTION OF AN ADU OR OTHER IMPROVEMENT UNDER THESE PLANS AT ALL.

OWNER
SCALE
PROJECT NO.
DATE

STYLE

DESCRIPTION
UTILITY DETAILS

SHEET
UT-2

ROOF FRAMING PLAN

¼" = 1'-0"

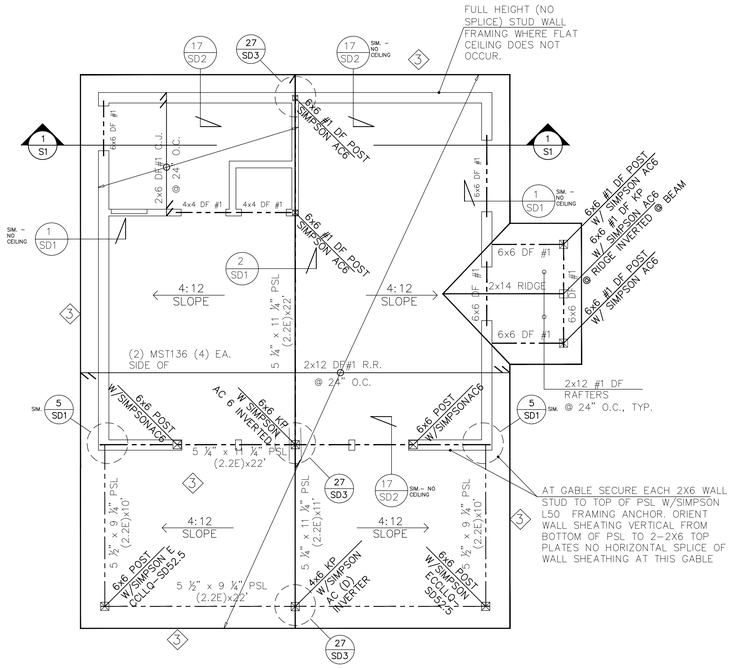

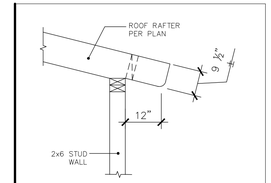

TYP. RAFTER EAVE / OVERHANG DETAIL

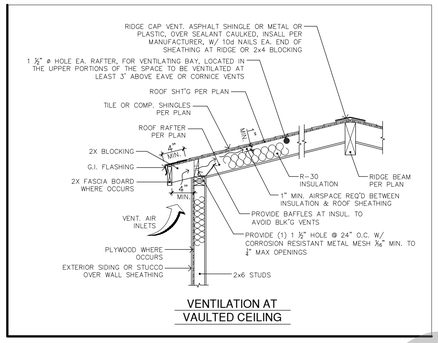

VENTILATION AT VAULTED CEILING

FOUNDATION PLAN

¼" = 1'-0"

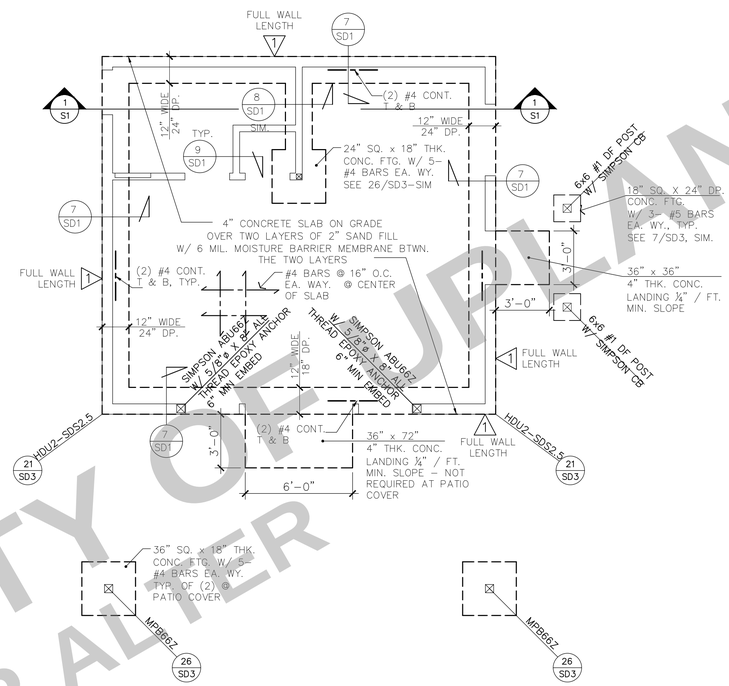

SECTION 1-1

¼" = 1'-0"

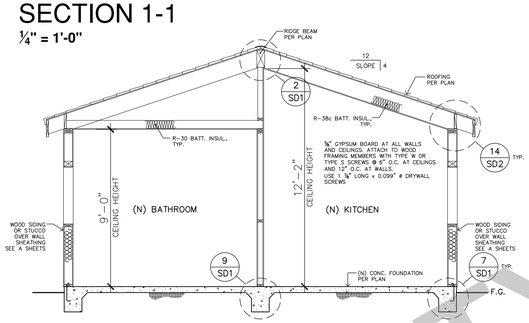

FRAMING NOTES

1. CONTRACTOR TO VERIFY ALL DIMENSIONS AND CONDITIONS PRIOR TO START OF WORK AND NOTIFY ENGINEER OF ANY DISCREPANCIES IMMEDIATELY.
2. ALL HEADERS 6x4 U.O.N. @ EXTERIOR WALLS
   4x4 U.O.M. @ INTERIOR WALLS
   HEADER DETAIL SEE: 5 / SD1
3. TOP PLATE SPLICE DETAIL SEE: 6 / SD1
4. ROOF DIAPHRAGM NAILING TO BE INSPECTED BEFORE COVERING. FACE DOWN GRAIN OF PLYWOOD SHALL BE PERPENDICULAR TO SUPPORTS.
5. ALL DIAPHRAGM AND SHEAR WALL NAILING SHALL UTILIZE COMMON NAIL OR GALVANIZED BOX.
6. WALL SHEATHING TO BE ⅜" CDX (P1=24/0, 3 PLY) AT ALL EXTERIOR WALLS, FULL LENGTH
7. SIDING TO BE HARDIBOARD (OPTIONAL- 3 COAT STUCCO)
8. DRYWALL TO BE ⅝" THROUGHOUT
9. ALL BOLT HOLES SHALL BE DRILLED 1/32" TO 1/16" OVERSIZED.
10. CEILING MIN. 9' HIGH
11. WALLS ARE 2x6 STUDS AT EXTERIOR WALLS
    2x4 STUDS @ INTERIOR WALLS, EXCEPT 2x6 @ PLUMBING WALLS
12. ROOF MATERIAL 1/2": CDX PLYWOOD (P1=24/0, 5 PLY) W/10D @ 6", 6", & 12 O.C. (3X BLK'G @EDGE)
13. DENOTES ROOF RAFTERS OR ROOF TRUSSES
18. DENOTES CEILING JOIST.
15. DENOTES POST SIZE 4"X MIN, U.N.O.
16. INDICATES SHEAR WALL W/ MIN. WALL LENGTH.
17. PROVIDE 2- 2X STUDS UNDER ALL BEAM ENDS WHERE NO POST IS CALLED FOR.
18. ALL LUMBER GRADES NOTED ON SPECIFIC MEMBERS (SEE ROOF FRAMING PLAN)
19. MINIMUM CONCRETE STRENGTH: 2500 PSI

ROOF SHEATHING

½" CDX PLYWD (P1=24/0) 5 PLY W/ 10d @ 6" O.C. BOUNDARIES EDGES & 12" O.C. FIELD - LAY PER PERPENDICULAR TO FRAMING, SEE: 3 / SD1

SHEAR WALL SCHEDULE

KEY

WALL MATERIAL	SILL ANCHOR	SIMPSON HOLDOWN	HORIZONTAL STRAP
15/32" DF CD-X PLYWOOD (P1=24/0, 5 PLY) W/10D AT 6"	⅝" Ø A.B. @ 4' O.C. W/ 3" SQ. X 0.229" WASH PLT.	SEE PLANS WHERE OCCURS	SEE 20/SD3

1. ALL PANELS EDGES BACKED WITH NOMINAL FRAMING OR BLOCKING. PLYWOOD MAY BE INSTALLED EITHER HORIZONTALLY OR VERTICALLY. HOLDOWNS NOTED ON PLANS SHALL BE PLACED AT END STUD OR END POST OF PANEL. NAILS SHALL BE COMMON NAILS.
2. ALL EXTERIOR WALL SHALL BE COVERED WITH STRUCTURAL SHEATHING AS INDICATED IN TABLE ABOVE. SEE 3/SD-1 AND 20/SD3

FASTENING SCHEDULE [TABLE R602.3(1)]

JOIST TO SILL OR GIRDER, TOENAIL	3-8d
BRIDGING TO JOIST OR STUD, TOENAIL EACH END	2-8d
2" SUBFLOOR TO JOIST OR GIRDER, BLIND AND FACE NAIL	2-16d
SOLE PLATE TO JOIST OR BLOCKING, TYP. FACE NAIL	16d @ 16" O.C.
SOLE PLATE TO JOIST OR BLOCKING, AT BRACED WALL PANELS	3-16d PER 16" O.C.
TOP PLATE TO STUD, END NAIL	2-16d 4-8D TOENAIL OR
STUD TO SOLE PLATE	2-16D END NAIL
DOUBLE STUDS, FACE NAIL	16D @ 24" O.C.
DOUBLED TOP PLATES, TYPICAL FACE NAIL	16D @ 16" O.C.
DOUBLED TOP PLATES, LAP SPICE	8-16D
TOP PLATES, LAPS AND INTERSECTIONS, FACE NAIL	2-16D
RIM JOIST TO TOP PLATE, TOENAIL	8D @ 6" O.C.
BLOCKING BETWEEN JOISTS OR RAFTERS TO TOP PLATE, TOENAIL	3-8D
CEILING JOISTS TO PLATE, TOENAIL	3-8D
CONTINUOUS HEADER TO STUD, TOENAIL	4-8D
CEILING JOISTS, LAPS OVER PARTITIONS, FACE NAIL	3-16D
CEILING JOISTS TO PARALLEL RAFTERS, FACE NAIL	3-16D
RAFTER TO PLATE, TOENAIL	3-8D
BUILT-UP CORNER STUDS	16D @ 24' O.C.
BUILT-UP BEAMS	16D @ 24" O.C. AT TOP AND BTTM STAGGRD

OPENING SIZE	EXTERIOR WALLS & ALL INTERIOR BEARING WALLS	INTERIOR NON-BEARING WALLS
<_4'-0"	4 X 6 OR 6 X 4	4 X 4 OR 4 X 6 FLAT
<_6'-0"	4 X 10 OR 6 X 6	4 X 6 OR 6 X 6
<_8'-0"	3½ X 9¼ SCL OR 6 X 8	4 X 8 OR 6 X 8

PROPERTY OF THE CITY OF UPLAND
DO NOT COPY OR ALTER

LAMFEI LIN BUILDERS
A PROFESSIONAL CORPORATION
970-546-2387
lflbuilders.com

PROJECT
PROJECT NAME

PROJECT ADDRESS

CITY OF UPLAND CALIFORNIA

DISCLAIMER:

BY USING THESE PERMIT READY CONSTRUCTION DOCUMENTS, THE RECIPIENT ACKNOWLEDGES, ACCEPTS AND VOLUNTARILY AFFIRMS THE FOLLOWING CONDITIONS:

1. THE USE OF THIS INFORMATION IS RESTRICTED TO THE ORIGINAL PROJECT FOR WHICH IT WAS PREPARED FOR; THE PERMIT READY ACCESSORY DWELLING UNIT (ADU) PROGRAM FOR THE CITY OF UPLAND ONLY. THIS IS A LIMITED SET OF STANDARDIZED ADU PLANS AND SPECIFICATIONS APPROVED BY THE CITY OF UPLAND BUILDING DEPARTMENT. BUILDING CODES DO CHANGE OVER TIME AND THE RECIPIENT SHALL ENSURE FULL COMPLIANCE UNDER ALL CODES THEN IN EFFECT AT THE TIME OF THE SUBJECT PERMIT. THIS DOES NOT ELIMINATE OR REDUCE THE RECIPIENT'S RESPONSIBILITY TO VERIFY ANY AND ALL INFORMATION RELEVANT TO THE RECIPIENT'S WORK AND RESPONSIBILITY ON THIS PROJECT. LAMFELI LIN BUILDERS SHALL NOT BE RESPONSIBLE FOR TRANSLATION ERRORS. DO NOT USE THESE CONSTRUCTION DOCUMENTS IF THE PERMIT HAS EXPIRED OR IS REVOKED AT ALL.

2. THE RECIPIENT RECOGNIZES AND ACKNOWLEDGES THAT THE USE OF THIS INFORMATION WILL BE AT THEIR SOLE RISK AND WITHOUT ANY LIABILITY OR LEGAL EXPOSURE TO LAMFELI LIN BUILDERS. NO WARRANTIES OF ANY NATURE, WHETHER EXPRESS OR IMPLIED, SHALL BE ATTACHED TO THESE DOCUMENTS AND THE INFORMATION CONTAINED THEREON. ANY USE, REUSE, OR ALTERATION OF THESE DOCUMENTS BY THE RECIPIENT OR BY OTHERS WILL BE AT THE RECIPIENT'S RISK AND FULL LEGAL RESPONSIBILITY. FURTHERMORE, THE RECIPIENT WILL, TO THE FULLEST EXTENT PERMITTED BY LAW, DEFEND, INDEMNIFY, AND HOLD LAMFELI LIN BUILDERS AND ITS ENGINEER HARMLESS FROM ANY AND ALL CLAIMS, SUITS, LIABILITY, DEMANDS, JUDGEMENTS, OR CONDITIONS ARISING OUT OF OR RESULTING THEREFROM ANY USE OF THESE CONSTRUCTION DOCUMENTS FOR OR ON ACCOUNT OF ANY INJURY, DEATH, DAMAGE OR LOSS TO PERSONS OR PROPERTY, INDIRECT OR CONSEQUENTIAL DAMAGES IN ANY AMOUNT. THIS INDEMNITY DOES NOT APPLY TO THE SOLE NEGLIGENCE OR WILLFUL MISCONDUCT OF LAMFELI LIN BUILDERS OR ITS ENGINEER.

3. THE DESIGN REPRESENTED BY THESE PLANS ARE COPYRIGHTED AND ARE SUBJECT TO COPYRIGHT PROTECTION.

4. IF THE RECIPIENT DOES NOT AGREE WITH THE ABOVE CONDITIONS, DO NOT PROCEED WITH THE CONSTRUCTION OF AN ADU OR OTHER IMPROVEMENT UNDER THESE PLANS AT ALL.

OWNER

SCALE

PROJECT NO.

DATE

STYLE

DESCRIPTION

ROOF FRAMING PLAN | FOUNDATION PLAN | SECTIONS

SHEET

S1

MINIMUM CONSTRUCTION REQUIREMENTS

GENERAL NOTES

1. THE CONTRACTOR/HOMEOWNER SHALL BE FULLY RESPONSIBLE FOR METHODS OF CONSTRUCTION, WORKMANSHIP, AND JOB SAFETY. WORKMANSHIP AND MATERIALS, INCLUDING FALSEWORK , BRACINGS, AND OTHER TEMPORARY ITEMS SHALL CONFORM TO THE GOVERNING CODES AND JOB SAFETY REQUIREMENTS PER OSHA STANDARDS.

2. CONSTRUCTION SAFETY PROVISIONS IN ACCORDANCE WITH THE BUILDING CODE SHALL BE PROVIDED AND APPROVED BY THE BUILDING INSPECTOR PRIOR TO STARTING ANY WORK ON THE BUILDING. PERMITS FOR PROTECTIVE FENCES AND FOR CANOPIES CONSTRUCTED ON PUBLIC PROPERTY MUST BE SECURED FROM THE DEPARTMENT OF BUILDING AND SAFETY.

3. CONSTRUCTION, INSPECTION AND PHYSICAL TESTING PROCEDURES SHALL CONFORM TO THE REQUIREMENTS OF THE GOVERNING CODES AND THE AMENDMENTS BY THE LOCAL JURISDICTION.

4. CONSTRUCTION LOADING SHALL NOT EXCEED THE DESIGN LIVE LOAD UNLESS SPECIAL, SHORING IS PROVIDED. ALLOWABLE LOADS SHALL BE REDUCED IN AREAS WHERE THE STRUCTURE HAS NOT ATTAINED ITS FULL DESIGN STRENGTH.

5. THE CONTRACTOR/HOMEOWNER SHALL PROVIDE A LEVEL TOP SURFACE FOR ALL SLABS IN ACCORDANCE WITH THE LEVELNESS TOLERANCE REQUIRED FOR ALL FINISHES, PARTITIONS, BUILT-IN CABINETS AND COUNTERS, ETC. THE CONTRACTOR SHALL ADJUST ALL BEAM SIDE FORMS TO ALLOW FOR AS-DELIVERED CAMBERS OF STEEL MEMBERS AND TO MAINTAIN THE MINIMUM DEPTH OF CONCRETE SLAB/TOPPING AT MIDSPAN OF THE STEEL MEMBERS.

6. PROVIDE NON-SLIP FINISH ON ALL CONCRETE STAIR TREADS, EXPOSED FLATWORK, AND WHERE SPECIFIED ON WORKING DRAWINGS.

7. ANY SUPPORT SERVICES PERFORMED BY THE ENGINEER DURING CONSTRUCTION SHALL BE DISTINGUISHED FROM CONTINUOUS AND DETAILED INSPECTION SERVICES WHICH ARE FURNISHED BY OTHERS. THESE SUPPORT SERVICES WHICH ARE FURNISHED BY THE ENGINEER, WHETHER OF MATERIAL OR WORK, AND WHETHER PERFORMED PRIOR TO, DURING OR AFTER COMPLETION OF CONSTRUCTION, ARE PERFORMED SOLELY FOR THE PURPOSE OF ASSISTING IN QUALITY CONTROL AND IN ACHIEVING CONFORMANCE WITH CONTRACT DRAWINGS AND SPECIFICATIONS, BUT THEY DO NOT GUARANTEE CONTRACTOR'S PERFORMANCE AND SHALL NOT BE CONSTRUED AS SUPERVISION OF CONSTRUCTION.

8. WHERE PUBIC UTILITY LINES OR EQUIPMENT MUST BE REMOVED AND RELOCATED, OBTAIN THE NECESSARY APPROVALS PRIOR TO STARTING CONSTRUCTION FROM THE RESPECTIVE UTILITY AGENCIES.

9. CONTROL JOINTS SHALL BE INSTALLED IN SLAB-ON-GRADES SO THE SLAB'S LENGTH-TO-WIDTH RATIO IS NOT MORE THAN 1.25:1. CONTROL JOINTS SHALL BE COMPLETED WITHIN 12 HOURS OF CONCRETE PLACEMENT AND THE JOINT DEPTH SHALL BE 1/4 THE SLAB THICKNESS.

10. ALL TEMPORARY SHORING SHALL BE THE RESPONSIBILITY OF THE CONTRACTOR/HOMEOWNER, UNLESS SPECIFICALLY NOTED OTHERWISE ON THE PLANS. CONTRACTOR SHALL PROVIDE A COPY OF SHORING PLANS TO THE ENGINEER PRIOR TO INSTALLATION.

GOVERNING CODES:

1. THE DESIGN COMPLIES TO THE 2022 CALIFORNIA RESIDENTIAL CODE (CRC), THE 2022 CALIFORNIA BUILDING CODE (CBC), 2022 CALIFORNIA PLUMBING CODE (CPC), -2022 CALIFORNIA MECHANICAL CODE (CMC), 2022 CALIFORNIA ELECTRICAL CODE (CEC) AND THE 2022 CALIFORNIA ENERGY CODE (CENC) AND WITH AMENDMENTS MADE BY THE LOCAL JURISDICTION.

2. CONSTRUCTION IN ACCORDANCE WITH THE GOVERNING CODES AND THE WORKING DRAWINGS DOES NOT GUARANTEE PROTECTION FROM LOSS OF LIFE OR INJURY OR PROPERTY DAMAGE.

DRAWING NOTES:

1. NOTES AND DETAILS ON DRAWINGS SHALL TAKE PRECEDENCE OVER THESE GENERAL SPECIFICATIONS. DIMENSIONS FOR CONSTRUCTION SHALL NOT BE SCALED FROM THE DRAWINGS.

2. THE CONTRACTOR/HOMEOWNER SHALL VERIFY ALL DIMENSIONS, ELEVATIONS AND SITE CONDITIONS BEFORE STARTING WORK. WHERE ACTUAL CONDITIONS CONFLICT WITH THE VARIOUS ELEMENTS OF THE WORKING DRAWINGS AND/OR SPECIFICATIONS, DISCREPANCIES OR OMISSIONS SHALL BE REPORTED TO THE ARCHITECT OR ENGINEER OF RECORD PRIOR TO PROCEEDING WITH CONSTRUCTION.

3. THE CONTRACTOR/HOMEOWNER SHALL ALLOW REASONABLE TIME FOR THE ARCHITECT OR ENGINEER OF RECORD TO RESOLVE CONFLICTS AND/OR MAKE REVISIONS TO THE DRAWINGS AND/OR SPECIFICATIONS. REVISIONS TO THE DRAWINGS SHALL BE REVIEWED AND APPROVED BY THE BUILDING OFFICIAL.

4. THE DRAWINGS AND SPECIFICATIONS REPRESENT THE FINISHED STRUCTURE, UNLESS OTHERWISE SHOWN, THEY DO NOT INDICATE THE METHOD OF CONSTRUCTION. THE CONTRACTOR/HOMEOWNER SHALL SUPERVISE AND DIRECT THE WORK AND HE SHALL BE SOLELY RESPONSIBLE FOR ALL CONSTRUCTION MEANS, METHODS, TECHNIQUES, SEQUENCES AND PROCEDURES.

5. THE STAMPED SET OF DRAWINGS AND SPECIFICATIONS SHALL BE KEPT AT THE JOB SITE AND SHALL BE AVAILABLE TO THE AUTHORIZED REPRESENTATIVES OF THE BUILDING AND SAFETY DEPARTMENT. THERE SHALL BE NO DEVIATION FROM THE APPROVED PLANS AND SPECIFICATIONS WITHOUT AN APPROVED CHANGE ORDER.

WOOD AND CARPENTRY:

1. LUMBER SHALL BE COAST REGION DOUGLAS FIR-LARCH GRADE WITH A MAXIMUM MOISTURE CONTENT OF 19% AND SHALL CONFORM TO THE FOLLOWING GRADES, U.N.O.
   - BEAMS AND POST SHALL BE OF #1 OR BETTER.
   - JOIST AND RAFTERS SHALL BE OF #1 OR BETTER.
   - FRAMING SUCH, AS STUDS, FURRING AND BLOCKING SHALL BE DF #2 OR BETTER.
   - SILL PLATES BEARING ON CONCRETE OR MASONRY SHALL BE PRESSURE TREATED DF #l.

2. PLYWOOD SHEATHING SHALL BE DOUGLAS FIR PLYWOOD PLIES WITH EXTERIOR GLUE CONFORMING TO THE LATEST PRODUCT STANDARDS (PS1) BY THE U.S. DEPARTMENT OF COMMERCE.

3. CONNECTIONS LISTED IN THE "NAILING SCHEDULE" ARE MINIMUM REQUIREMENTS FOR COMMON WIRE NAILS. WHERE POSSIBLE, NAILS SHALL BE DRIVEN PERPENDICULAR TO THE GRAIN INSTEAD OF TOE NAILS. (CRC, TABLE R602.3 (1))

4. STEEL FASTENERS AND CONNECTORS SHALL BE SIMPSON OR EQUAL. FULL NAILING OR BOLTING SHALL BE USED ON SPECIFIED HARDWARE, U.N.O.

5. MACHINE BOLT HOLES IN WOOD MEMBERS SHALL HAVE A DIAMETER EQUAL TO THE NOMINAL BOLT DIAMETER. LAG BOLTS IN WOOD MEMBERS SHALL BE PRE-DRILLED TO THE LAG– BOLT DIAMETER MINUS 1/8". A STEEL WASHER SHALL BE PROVIDED UNDER ALL BOLT HEADS AND NUTS THAT BEAR UPON WOOD. BOLTS SHALL BE ASTM A-307 OR BETTER.

6. HOLES AND NOTCHES IN WOOD MEMBERS, UNLESS OTHERWISE DETAILED OR APPROVED BY THE ENGINEER, SHALL MEET THE FOLLOWING REQUIREMENTS: HOLES SHALL BE LOCATED ON THE CENTER OF THE MEMBER OR AT LEAST 2" FROM THE TOP OR BOTTOM OF THE MEMBER; THE DIAMETER OF THE HOLE SHALL NOT EXCEED 1/3 THE DEPTH OF THE MEMBER; NOTCHES IN THE TOP OR BOTTOM OF MEMBERS SHALL NOT EXCEED 1/6 THE DEPTH OF THE MEMBER AND SHALL NOT BE LOCATED IN THE MIDDLE THIRD OF THE SPAN; BEAMS OR JOISTS MAY BE NOTCHED AT THE ENDS WHERE THE NOTCH DOES NOT EXCEED 1/4 OF THE BEAM DEPTH.

7. CUTTING AND NOTCHING OF STUDS: STUDS IN EXTERIOR WALLS AND BEARING PARTITIONS MAY BE CUT OR NOTCHED TO A DEPTH NOT EXCEEDING 25% OF ITS WIDTH. CUTTING OR NOTCHING OF STUDS IN NON-BEARING PARTITIONS SHALL NOT EXCEED 40% OF THE WIDTH.

8. BORED HOLES IN STUDS: A HOLE NOT GREATER IN DIAMETER THAN 40% OF STUD WIDTH MAY BE BORED IN ANY WOOD STUD. BORED HOLES NOT GREATER THAN 60% OF THE WIDTH OF THE STUD ARE PERMITTED IN NONBEARING PARTITIONS. IN NO CASE SHALL THE EDGES OF THE BORED HOLE BE NEARER THAN 5/8" TO THE EDGE OF THE STUD. BORED HOLES SHALL NOT BE LOCATED AT THE SAME SECTION OF STUD AS A CUT OR NOTCH.

9. WOOD MEMBERS BOLTED TO CONCRETE SHALL HAVE A MINIMUM OF 2 BOLTS PER MEMBER, WITH AT LEAST ONE BOLT WITHIN 12" FROM EACH MEMBER END. WOOD IN CONTACT WITH CONCRETE SHALL BE PRESSURE TREATED.

10. STUD PARTITION WALLS AND JOISTS CONTAINING PLUMBING, HEATING OR OTHER PIPES SHALL BE FRAMED TO GIVE PROPER CLEARANCE FOR THE PIPING. WHERE A PARTITION CONTAINING SUCH PIPING RUNS PARALLEL TO FLOOR JOISTS, THE JOIST UNDERNEATH SUCH PARTITION SHALL BE DOUBLED AND SPACED TO PERMIT PASSAGE OF SUCH PIPES.

11. ROOF AND FLOOR SHEATHING SHALL BE AS INDICATED ON THE ACCOMPANYING PLANS. STAGGER PANEL END JOINTS. NAILING TO BE INSPECTED BEFORE COVERING.

12. FOUNDATION SILLS SHALL BE PRESSURE TREATED, OR FOUNDATION GRADE REDWOOD.

WOOD SHEAR WALLS:

1. PLYWOOD SHEATHING SHALL CONSIST OF MINIMUM 4'X 8' PANELS WHEREVER POSSIBLE. THE MINIMUM PANEL WIDTH SHALL BE 24" WITH 2X BLOCKING MEMBERS. STUCCO APPLIED OVER PLYWOOD SHEATHING SHALL HAVE TWO LAYERS OF GRADE "D" PAPER. PLYWOOD PANELS AND FRAMING SHALL BE NAILED WITH COMMON NAILS. A MINIMUM EDGE DISTANCE OF 1/2" SHALL BE PROVIDED FOR BOUNDARY AND EDGE NAILING ON PLYWOOD SHEATHING OR FRAMING.

2. WOOD SILL PLATES SHALL BE CONTINUOUS AND FREE OF CUTS AND NOTCHES. PERFORATIONS SHALL BE LIMITED TO 1 ½" IN DIAMETER AND SHALL BE LOCATED AS CLOSE TO THE CENTER AS POSSIBLE.

3. FRAMING MEMBERS WITH PLYWOOD SHEATHING ON BOTH SIDES SHALL BE OFFSET SO THAT THE PANEL JOINTS FOR EACH SIDE ARE ON DIFFERENT FRAMING MEMBERS.

4. FRAMING MEMBERS, INCLUDING BLOCKING, RECEIVING NAILS SPACED AT 3" O.C. OR LESS (6"O.C. OR LESS FOR FRAMING MEMBERS WITH NAILING FROM BOTH SIDES), SHALL BE 3X NOMINAL OR WIDER. NAIL SPACING SHALL BE STAGGERED.

5. HOLDOWNS CONNECTORS SHALL BE SIMPSON OR EQUAL INSTALLED ON 4X FRAMING MEMBERS AND SHALL FOLLOW INSTALLATION RECOMMENDATIONS AS SPECIFIED BY MANUFACTURER. BOLTS ON WOOD POST SHALL HAVE A MAXIMUM OVERSIZED HOLE EQUAL TO THE BOLT DIAMETER PLUS 1/16", SHALL BE TIGHT AND VERIFIED BY INSPECTOR JUST PRIOR TO INSTALLATION OF SHEATHING.

6. SQUARE PLATE WASHERS, INSTEAD OF CUT WASHERS, SHALL BE PROVIDED FOR SILL PLATE ANCHOR BOLTS AND FOR WOOD POSTS AT HOLDOWN CONNECTORS BOLTS. PLATE WASHER SHALL BE SIMPSON BP WASHERS OR APPROVED PLATES WITH SAME DIMENSIONS.

7. CONTRACTOR/HOMEOWNER SHALL EXERCISE ALL CARE NECESSARY WHEN USING PNEUMATIC NAILING EQUIPMENT TO INSURE THAT THE FACE PLY OF PLYWOOD SHEATHING IS NOT BROKEN BY NAILHEAD PENETRATION. CONTRACTOR/HOMEOWNER SHALL REPLACE ALL SHEATHING WITH MORE THAN 10% OF THE NAIL HEADS IN ANYONE PLYWOOD PANEL PENETRATING THE FACE PLY. PLYWOOD PANELS MAY BE RE-NAILED AS AN ALTERNATE ONLY WHEN APPROVED IN WRITING BY BOTH THE ARCHITECT/ENGINEER AND THE LOCAL AUTHORITY HAVING JURISDICTION.

8. SHEAR WALLS WITH A SHEAR VALUE GREATER THAN 350 POUNDS PER FOOT SHALL USE A MINIMUM OF 3X NOMINAL MEMBERS FOR FOUNDATION SILL PLATES AND FRAMING MEMBERS RECEIVING EDGE NAILING FROM ABUTTING PLYWOOD PANELS.

9. FASTENERS FOR STUCCO SHEAR WALLS SHALL BE 11 GAGE X 1 ½" GALVANIZED WIRE LATH FURRED. ¼" STAPLES AND SELF-FURRING LATH ARE NOT PERMITTED.

10. SOLID BLOCKING SHALL BE PROVIDED AT ALL HORIZONTAL JOINTS OCCURRING IN BRACED WALL PANELS.

CONCRETE:

1. CONCRETE MIXES SHALL BE SUBMITTED TO THE ARCHITECT OR ENGINEER OF RECORD FOR APPROVAL. MATERIAL SHALL BE PROPORTIONED TO PRODUCE CONCRETE WITH THE FOLLOW ING MINIMUM COMPRESSIVE STRENGTHS AT 28 DAYS, U.N.O:
   - CONTINUOUS FOOTINGS: 2,500 PSI
   - ISOLATED PADS: 2500 PSI
   - SLAB ON GRADE: 2500 PSI

   NOTE: CONTINUOUS INSPECTION BY A DEPUTY INSPECTOR IS REQUIRED FOR ALL CONCRETE DESIGNED WITH F'C GREATER THAN 2500 PSI

2. NORMAL WEIGHT CONCRETE SHALL BE 145 TO 155 POUNDS PER CUBIC FOOT. LIGHTWEIGHT CONCRETE SHALL BE IN ACCORDANCE WITH THE APPROVED DESIGN MIX SHOWN ON THE PLANS.

3. CEMENT SHALL CONFORM TO ASTM C 150, TYPE V CEMENT. FINE AND COARSE AGGREGATE SHALL CONFORM TO ASTM C33. WHEN SPECIFIED, AIR-ENTRAINING ADMIXTURES SHALL COMPLY WITH ASTM C260. READY MIX CONCRETE SHALL BE MIXED AND DELIVERED IN ACCORDANCE WITH ASTM C94.

4. MAXIMUM SIZE OF COURSE AGGREGATE FOR SLABS SHALL BE 1" AND 1 ½" ELSEWHERE, U.N.O. SAND SHALL BE CLEAN, HARD, DURABLE, WASHED , AND FREE FROM SILT, LIME OR CLAY MIXING WATER SHALL BE CLEAN AND FREE FROM INJURIOUS AMOUNTS OF OIL, ACIDS, ALKALIS, ORGANIC MATERIALS OR OTHER DELETERIOUS SUBSTANCES. CONCRETE MIX MAY CONTAIN A POLYMER BASED WATER REDUCING ADMIXTURE. THE MAXIMUM SLUMP OF CONCRETE SHALL NOT EXCEED 6" UNLESS OTHERWISE APPROVED BY THE ARCHITECT OR ENGINEER. -

5. CEMENT TYPES SHALL NOT BE MIXED IN THE CONCRETE MIX. CALCIUM CHLORIDE OR FLY ASH SHALL NOT BE USED IN THE CONCRETE MIX.

6. FORMWORK SHALL COMPLY WITH STANDARD PUBLICATION (ACI 347) AND THE PROJECT SPECIFICATIONS. THE CONTRACTOR SHALL BE RESPONSIBLE FOR THE DESIGN, DETAILING, CARE, PLACEMENT AND REMOVAL OF THE FORMWORK AND SHORES.

7. PIPES, DUCTS, SLEEVES, CHASES, ETC. SHALL NOT BE PLACED IN SLABS, BEAMS, OR WALLS UNLESS SPECIFICALLY SHOWN OR NOTED ON PLANS. CONTRACTOR SHALL OBTAIN APPROVAL FOR INSTALLATION OF ANY ADDITIONAL PIPES, DUCTS. ETC, REFER TO ARCHITECTURAL AND MECHANICAL PLANS FOR LOCATIONS OF ALL PIPES, DUCTS, CHASES, ETC. ALL SUSPENDED EQUIPMENT TO BE PROVIDED WITH CRC/CBC APPROVED LATERAL OR SWAYS BRACING.

EPOXY AND MECHANICAL ANCHORS AND DOWELS:

1. BOLTS AND REINFORCEMENT EMBEDDED INTO CONCRETE OR MASONRY WITH EPOXY SHALL BE INSTALLED PER MANUFACTURER'S RECOMMENDATIONS AND APPROVED ICC-ES/IAPMO-ES EVALUATION REPORTS.

2. MINIMUM SUBSTRATE AND AMBIENT TEMPERATURE SHALL BE AS RECOMMENDED BY MANUFACTURER PRIOR TO PLACING EPOXY. THE MINIMUM AGE OF CONCRETE TO BE BONDED SHALL BE 21 DAYS, U.N.O.

3. THE HOLES SHALL BE DRILLED WITH AN ELECTRO-PNEUMATIC ROTARY HAMMER DRILL USING CARBIDE TIP BITS CONFORMING TO ANSI SPECIFICATION # 894-12-1977. THE HOLES SHALL BE CLEANED OF DUST AND DEBRIS WITH A NYLON BRUSH AND A JET OF COMPRESSED AIR. HOLE DIAMETER AND DEPTH SHALL BE INSTALLED PER MANUFACTURERS RECOMMENDATIONS UNLESS NOTED OTHERWISE.

4. CLEAN MACHINE BOLTS/REINFORCING BARS SHALL BE PLACED IN CLEAN DRILLED HOLES THAT ARE PARTIALLY FILLED WITH EPOXY SO THAT SOME EXCESS EPOXY COMES OUT OF THE HOLE.

5. ALL EPOXY ADHESIVE INSTALLATIONS SHALL HAVE CONTINUOUS SPECIAL INSPECTION PER THE CURRENT CODE REQUIREMENTS AND THE ICC-ES/IAPMO-ES EVALUATION REPORT.

REINFORCING STEEL:

1. REINFORCING STEEL SHALL CONFORM TO ASTM 615, GRADE 60, U.N.O. STEEL BARS SHALL BE DEFORMED BARS THAT ARE FREE FROM GREASE, RUST, MILL SCALE OR ANY OTHER FOREIGN MATERIAL WHICH MAY AFFECT THE BARS ABILITY TO BONDTO THE CONCRETE. REINFORCING STEEL SHALL HAVE THE MINIMUM PROTECTIVE COVER AS FOLLOWS:

- CONCRETE CAST AGAINST AND PERMANENTLY EXPOSED TO EARTH	3"
- CONCRETE EXPOSED TO EARTH OR WEATHER, # 6 THRU # 11 BARS	2"
- CONCRETE NOT EXPOSED TO WEATHER, NOT IN CONTACT WITH GROUND	½"
- CONCRETE FOR SLABS, WALLS AND JOISTS, # 11 BARS AND SMALLER	¾"
- CONCRETE FOR BEAMS AND COLUMNS, INCLUDING TIES, STIRRUPS, SPIRALS	1 ½"
- MASONRY WALLS, PILASTER AND LINTELS REINFORCEMENT	1 ½"

2. ALL DETAILING OF REINFORCING SHALL CONFORM TO THE REQUIREMENTS OF ACI 318. ALL REINFORCING BAR BENDS SHALL BE MADE COLD. REINFORCEMENT THAT IS PARTIALLY EMBEDDED IN CONCRETE SHALL NOT BE FIELD BENT, U.N.O.

3. CONTRACTOR SHALL USE CHAIRS OR OTHER SUPPORT DEVICES RECOMMENDED BY THE CRSI TO SUPPORT THE REINFORCING BARS OR WELDED WIRE MESH PRIOR TO PLACING CONCRETE. WELDED WIRE MESH SHALL BE CONTINUOUSLY SUPPORTED AT 36" O.C. MAXIMUM.

4. LAP SPLICES SHALL HAVE A MINIMUM LENGTH OF 24" OR 40 BAR DIAMETERS FOR MASONRY AND 12" OR 30 BAR DIAMETERS FOR CONCRETE, U.N.O.

5. REINFORCING STEEL, ANCHOR BOLTS, DOWELS, AND WALL TIES SHALL BE SECURED IN POSITION AND INSPECTED BY THE LOCAL BUILDING INSPECTOR PRIOR TO POURING OF ANY CONCRETE OR GROUTING MASONRY.

6. REINFORCEMENT TO BE WELDED TO STEEL MEMBERS SHALL CONFORM TO ASTM 706 AND SHALL REQUIRE CONTINUOUS INSPECTION.

PROPERTY OF THE CITY OF UPLAND
DO NOT COPY OR ALTER

LAMFEI LIN BUILDERS
A PROFESSIONAL CORPORATION
970-546-2387
lflbuilders.com

PROJECT
PROJECT NAME

PROJECT ADDRESS

CITY OF UPLAND CALIFORNIA

DISCLAIMER:

BY USING THESE PERMIT READY CONSTRUCTION DOCUMENTS, THE RECIPIENT ACKNOWLEDGES, ACCEPTS AND VOLUNTARILY AFFIRMS THE FOLLOWING CONDITIONS:

1. THE USE OF THIS INFORMATION IS RESTRICTED TO THE ORIGINAL PROJECT FOR WHICH IT WAS PREPARED FOR; THE PERMIT READY ACCESSORY DWELLING UNIT (ADU) PROGRAM FOR THE CITY OF UPLAND ONLY. THIS IS A LIMITED SET OF STANDARDIZED ADU PLANS AND SPECIFICATIONS APPROVED BY THE CITY OF UPLAND BUILDING DEPARTMENT. BUILDING CODES DO CHANGE OVER TIME AND THE RECIPIENT SHALL ENSURE FULL COMPLIANCE UNDER ALL CODES THEN IN EFFECT AT THE TIME OF THE SUBJECT PERMIT. THIS DOES NOT ELIMINATE OR REDUCE THE RECIPIENT'S RESPONSIBILITY TO VERIFY ANY AND ALL INFORMATION RELEVANT TO THE RECIPIENT'S WORK AND RESPONSIBILITY ON THIS PROJECT. LAMFEI LIN BUILDERS SHALL NOT BE RESPONSIBLE FOR TRANSLATION ERRORS. DO NOT USE THESE CONSTRUCTION DOCUMENTS IF THE PERMIT HAS EXPIRED OR IS REVOKED AT ALL.

2. THE RECIPIENT RECOGNIZES AND ACKNOWLEDGES THAT THE USE OF THIS INFORMATION WILL BE AT THEIR SOLE RISK AND WITHOUT ANY LIABILITY OR LEGAL EXPOSURE TO LAMFELI LIN BUILDERS. NO WARRANTIES OF ANY NATURE, WHETHER EXPRESS OR IMPLIED, SHALL BE ATTACHED TO THESE DOCUMENTS AND THE INFORMATION CONTAINED THEREON. ANY USE, REUSE, OR ALTERATION OF THESE DOCUMENTS BY THE RECIPIENT OR BY OTHERS WILL BE AT THE RECIPIENT'S RISK AND FULL LEGAL RESPONSIBILITY. FURTHERMORE, THE RECIPIENT WILL, TO THE FULLEST EXTENT PERMITTED BY LAW, DEFEND, INDEMNIFY, AND HOLD LAMFELI LIN BUILDERS AND ITS ENGINEER HARMLESS FROM ANY AND ALL CLAIMS, SUITS, LIABILITY, DEMANDS, JUDGEMENTS, OR CONDITIONS ARISING OUT OF OR RESULTING THEREFROM ANY USE OF THESE CONSTRUCTION DOCUMENTS FOR OR ON ACCOUNT OF ANY INJURY, DEATH, DAMAGE OR LOSS TO PERSONS OR PROPERTY, INDIRECT OR CONSEQUENTIAL DAMAGES IN ANY AMOUNT. THIS INDEMNITY DOES NOT APPLY TO THE SOLE NEGLIGENCE OR WILLFUL MISCONDUCT OF LAMFELI LIN BUILDERS OR ITS ENGINEER.

3. THE DESIGN REPRESENTED BY THESE PLANS ARE COPYRIGHTED AND ARE SUBJECT TO COPYRIGHT PROTECTION.

4. IF THE RECIPIENT DOES NOT AGREE WITH THE ABOVE CONDITIONS, DO NOT PROCEED WITH THE CONSTRUCTION OF AN ADU OR OTHER IMPROVEMENT UNDER THESE PLANS AT ALL.

OWNER
SCALE
PROJECT NO.
DATE

STYLE

DESCRIPTION
MINIMUM CONSTRUCTION REQUIREMENTS | GENERAL NOTES

SHEET
S2

1 TYP. WALL / RAFTER CONNECTION

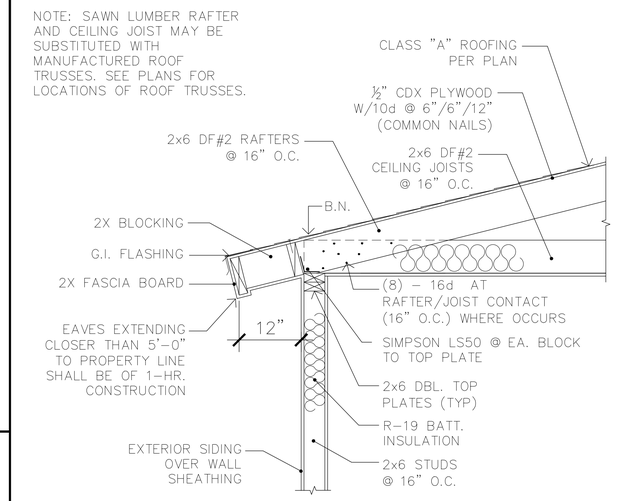

2 RIDGE DETAIL

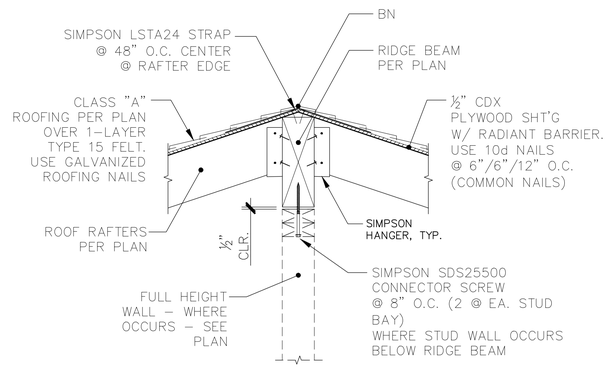

3 TYP. PLYWOOD NAILING

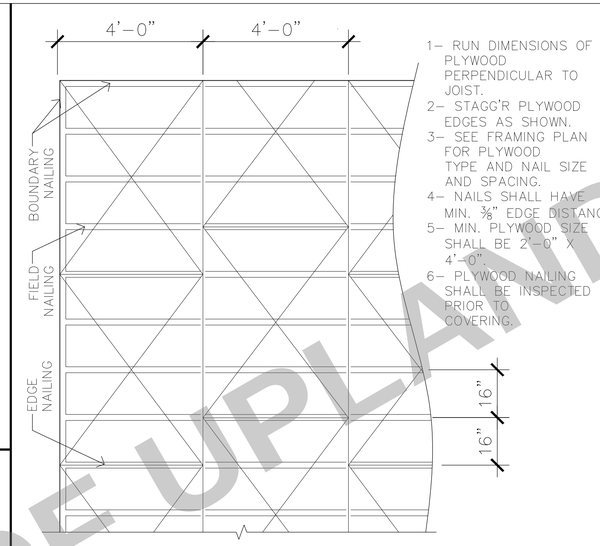

4 TYP. SHEAR WALL U.O.N.

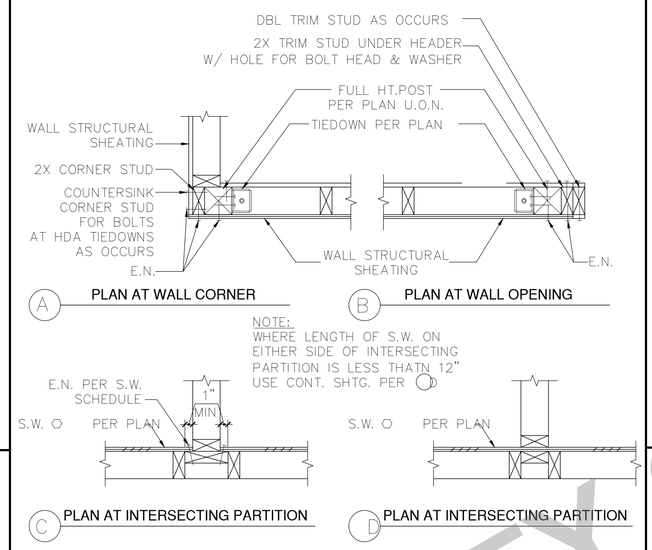

5 TYP. HEADER DETAIL

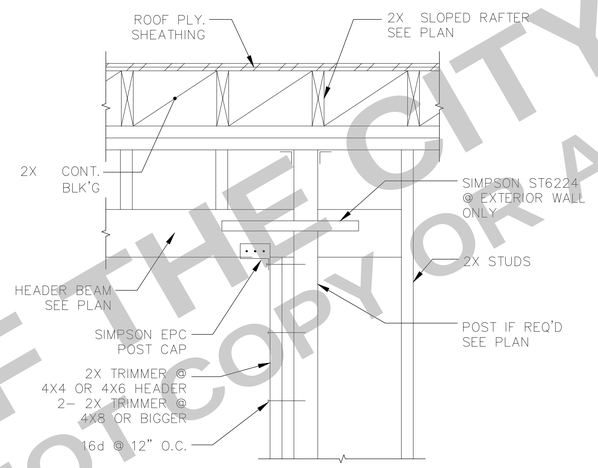

6 TOP PLATE SPLICE DETAIL

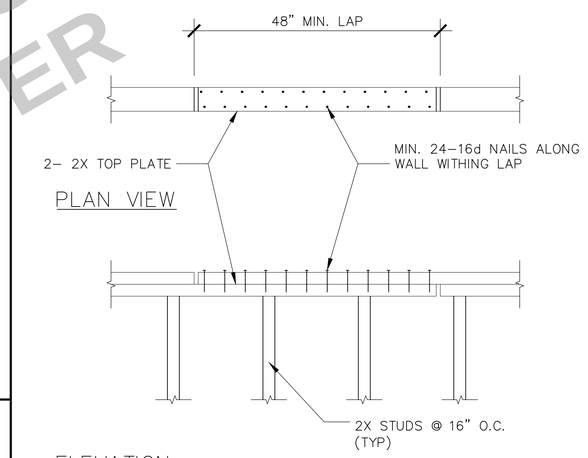

7 FOOTING DETAIL

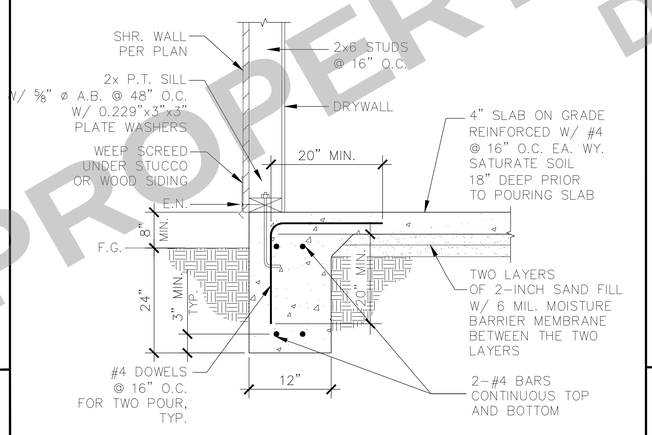

MONOPOUR CONCRETE FOOTING WITH SLAB

8 FOOTING DETAIL

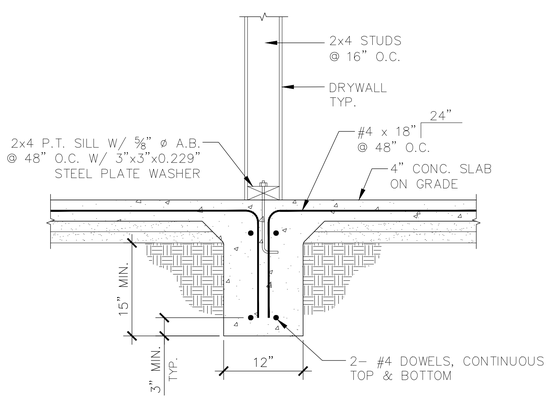

SEE DETAIL 7 FOR ITEMS NOT NOTED

9 INTERIOR PARTITION WALL TO SLAB

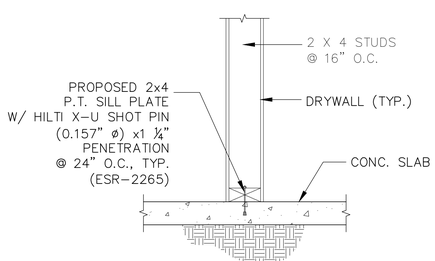

PROPERTY OF THE CITY OF UPLAND
DO NOT COPY OR ALTER

LAMFEI LIN BUILDERS
A PROFESSIONAL CORPORATION
970-546-2387
lflbuilders.com

PROJECT
PROJECT NAME

PROJECT ADDRESS

CITY OF UPLAND CALIFORNIA

DISCLAIMER:

BY USING THESE PERMIT READY CONSTRUCTION DOCUMENTS, THE RECIPIENT ACKNOWLEDGES, ACCEPTS AND VOLUNTARILY AFFIRMS THE FOLLOWING CONDITIONS:

1. THE USE OF THIS INFORMATION IS RESTRICTED TO THE ORIGINAL PROJECT FOR WHICH IT WAS PREPARED FOR; THE PERMIT READY ACCESSORY DWELLING UNIT (ADU) PROGRAM FOR THE CITY OF UPLAND ONLY. THIS IS A LIMITED SET OF STANDARDIZED ADU PLANS AND SPECIFICATIONS APPROVED BY THE CITY OF UPLAND BUILDING DEPARTMENT. BUILDING CODES DO CHANGE OVER TIME AND THE RECIPIENT SHALL ENSURE FULL COMPLIANCE UNDER ALL CODES THEN IN EFFECT AT THE TIME OF THE SUBJECT PERMIT. THIS DOES NOT ELIMINATE OR REDUCE THE RECIPIENT'S RESPONSIBILITY TO VERIFY ANY AND ALL INFORMATION RELEVANT TO THE RECIPIENT'S WORK AND RESPONSIBILITY ON THIS PROJECT. LAMFEI LIN BUILDERS SHALL NOT BE RESPONSIBLE FOR TRANSLATION ERRORS. DO NOT USE THESE CONSTRUCTION DOCUMENTS IF THE PERMIT HAS EXPIRED OR IS REVOKED AT ALL.

2. THE RECIPIENT RECOGNIZES AND ACKNOWLEDGES THAT THE USE OF THIS INFORMATION WILL BE AT THEIR SOLE RISK AND WITHOUT ANY LIABILITY OR LEGAL EXPOSURE TO LAMFELI LIN BUILDERS. NO WARRANTIES OF ANY NATURE, WHETHER EXPRESS OR IMPLIED, SHALL BE ATTACHED TO THESE DOCUMENTS AND THE INFORMATION CONTAINED THEREON. ANY USE, REUSE, OR ALTERATION OF THESE DOCUMENTS BY THE RECIPIENT OR BY OTHERS WILL BE AT THE RECIPIENT'S RISK AND FULL LEGAL RESPONSIBILITY. FURTHERMORE, THE RECIPIENT WILL, TO THE FULLEST EXTENT PERMITTED BY LAW, DEFEND, INDEMNIFY, AND HOLD LAMFELI LIN BUILDERS AND ITS ENGINEER HARMLESS FROM ANY AND ALL CLAIMS, SUITS, LIABILITY, DEMANDS, JUDGEMENTS, OR CONDITIONS ARISING OUT OF OR RESULTING THEREFROM ANY USE OF THESE CONSTRUCTION DOCUMENTS FOR OR ON ACCOUNT OF ANY INJURY, DEATH, DAMAGE OR LOSS TO PERSONS OR PROPERTY, INDIRECT OR CONSEQUENTIAL DAMAGES IN ANY AMOUNT. THIS INDEMNITY DOES NOT APPLY TO THE SOLE NEGLIGENCE OR WILLFUL MISCONDUCT OF LAMFELI LIN BUILDERS OR ITS ENGINEER.

3. THE DESIGN REPRESENTED BY THESE PLANS ARE COPYRIGHTED AND ARE SUBJECT TO COPYRIGHT PROTECTION.

4. IF THE RECIPIENT DOES NOT AGREE WITH THE ABOVE CONDITIONS, DO NOT PROCEED WITH THE CONSTRUCTION OF AN ADU OR OTHER IMPROVEMENT UNDER THESE PLANS AT ALL.

OWNER
SCALE
PROJECT NO.
DATE

STYLE

DESCRIPTION
STRUCTURAL DETAILS

SHEET
SD1

TYP. REBAR HOOKS, BENDS & SPLICES

10

' L' = 60 BAR ø FOR #6 & SMALLER IN CONC. 72 BAR FOR #7 & LARGER IN CONC. 48 BAR ø FOR MASONRY WHEN ADJACENT BARS ARE SPACED GREATER THAN 3 INCHES. 62 BARS ARE SPACED 3 INCHES OR LESS.

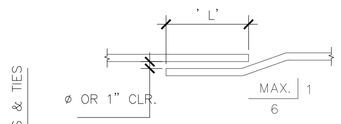

TYP. LAP SPLICE AND OFFSET

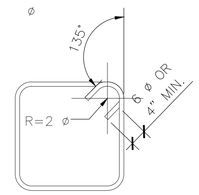

STIRRUP OR TIE

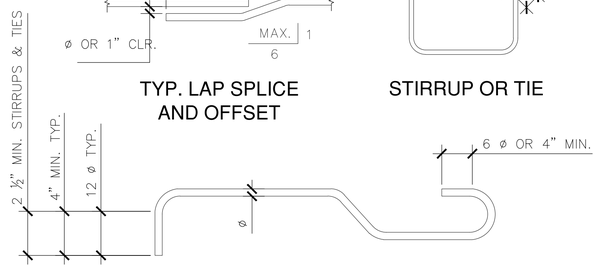

90° BEND

180° HOOK

TYP. SPLICE @ CONC. FTG.

11

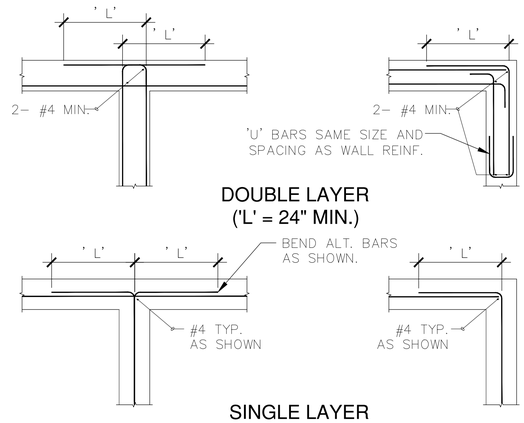

DOUBLE LAYER ('L' = 24" MIN.)

SINGLE LAYER ('L' = 24" MIN.)

DOOR HEAD

12

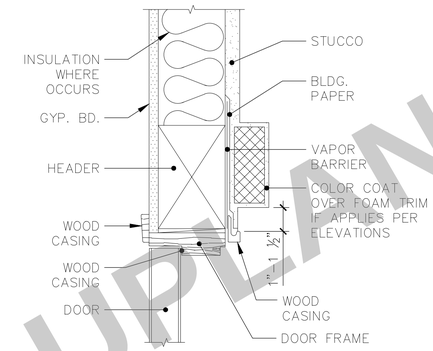

WINDOW HEAD

13

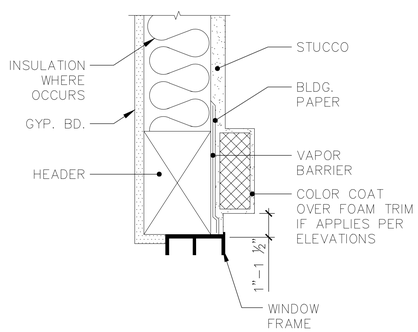

EAVE AT RAKE VAULTED CEILING

14

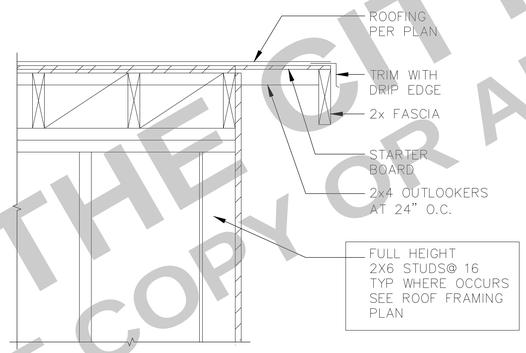

DOOR JAMB

15

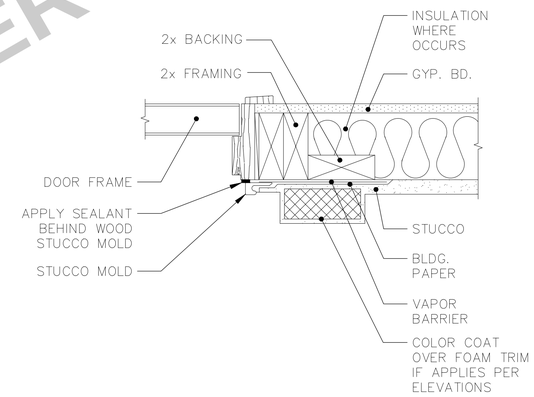

WINDOW JAMB

16

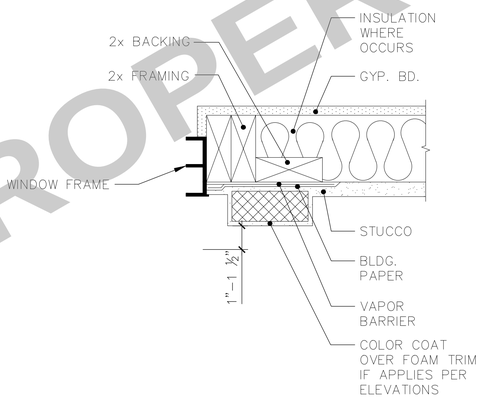

EAVE AT RAKE W/ CEILING

17

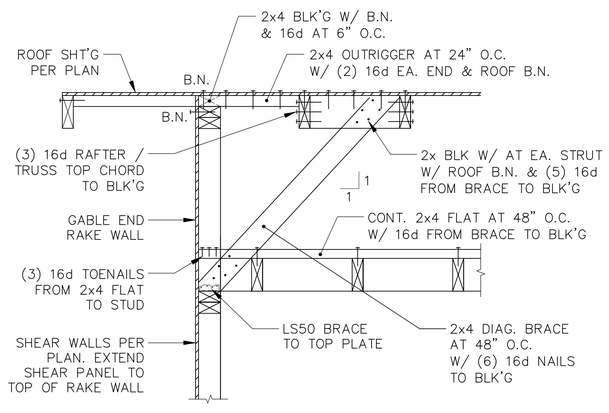

NOTE: USE FULL HEIGHT (NO SPLICE) 2"X6" STUD WALL FRAMING WHERE FLAT CEILING DOES NOT NOT OCCUR.

STANDARD WEEP SCREED

18

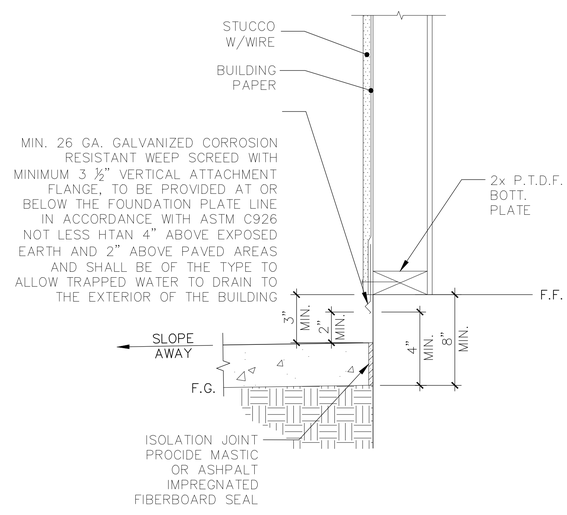

PROPERTY OF THE CITY OF UPLAND
DO NOT COPY OR ALTER

LAMFEI LIN BUILDERS
A PROFESSIONAL CORPORATION
970-546-2387
lflbuilders.com

PROJECT
PROJECT NAME

PROJECT ADDRESS

CITY OF UPLAND CALIFORNIA

DISCLAIMER:

BY USING THESE PERMIT READY CONSTRUCTION DOCUMENTS, THE RECIPIENT ACKNOWLEDGES, ACCEPTS AND VOLUNTARILY AFFIRMS THE FOLLOWING CONDITIONS:

1. THE USE OF THIS INFORMATION IS RESTRICTED TO THE ORIGINAL PROJECT FOR WHICH IT WAS PREPARED FOR; THE PERMIT READY ACCESSORY DWELLING UNIT (ADU) PROGRAM FOR THE CITY OF UPLAND ONLY. THIS IS A LIMITED SET OF STANDARDIZED ADU PLANS AND SPECIFICATIONS APPROVED BY THE CITY OF UPLAND BUILDING DEPARTMENT. BUILDING CODES DO CHANGE OVER TIME AND THE RECIPIENT SHALL ENSURE FULL COMPLIANCE UNDER ALL CODES THEN IN EFFECT AT THE TIME OF THE SUBJECT PERMIT. THIS DOES NOT ELIMINATE OR REDUCE THE RECIPIENT'S RESPONSIBILITY TO VERIFY ANY AND ALL INFORMATION RELEVANT TO THE RECIPIENT'S WORK AND RESPONSIBILITY ON THIS PROJECT. LAMFEI LIN BUILDERS SHALL NOT BE RESPONSIBLE FOR TRANSLATION ERRORS. DO NOT USE THESE CONSTRUCTION DOCUMENTS IF THE PERMIT HAS EXPIRED OR IS REVOKED AT ALL.

2. THE RECIPIENT RECOGNIZES AND ACKNOWLEDGES THAT THE USE OF THIS INFORMATION WILL BE AT THEIR SOLE RISK AND WITHOUT ANY LIABILITY OR LEGAL EXPOSURE TO LAMFEI LIN BUILDERS. NO WARRANTIES OF ANY NATURE, WHETHER EXPRESS OR IMPLIED, SHALL BE ATTACHED TO THESE DOCUMENTS AND THE INFORMATION CONTAINED THEREON. ANY USE, REUSE, OR ALTERATION OF THESE DOCUMENTS BY THE RECIPIENT OR BY OTHERS WILL BE AT THE RECIPIENT'S RISK AND FULL LEGAL RESPONSIBILITY. FURTHERMORE, THE RECIPIENT WILL, TO THE FULLEST EXTENT PERMITTED BY LAW, DEFEND, INDEMNIFY, AND HOLD LAMFEI LIN BUILDERS AND ITS ENGINEER HARMLESS FROM ANY AND ALL CLAIMS, SUITS, LIABILITY, DEMANDS, JUDGEMENTS, OR CONDITIONS ARISING OUT OF OR RESULTING THEREFROM ANY USE OF THESE CONSTRUCTION DOCUMENTS FOR OR ON ACCOUNT OF ANY INJURY, DEATH, DAMAGE OR LOSS TO PERSONS OR PROPERTY, INDIRECT OR CONSEQUENTIAL DAMAGES IN ANY AMOUNT. THIS INDEMNITY DOES NOT APPLY TO THE SOLE NEGLIGENCE OR WILLFUL MISCONDUCT OF LAMFEI LIN BUILDERS OR ITS ENGINEER.

3. THE DESIGN REPRESENTED BY THESE PLANS ARE COPYRIGHTED AND ARE SUBJECT TO COPYRIGHT PROTECTION.

4. IF THE RECIPIENT DOES NOT AGREE WITH THE ABOVE CONDITIONS, DO NOT PROCEED WITH THE CONSTRUCTION OF AN ADU OR OTHER IMPROVEMENT UNDER THESE PLANS AT ALL.

OWNER
SCALE
PROJECT NO.
DATE

STYLE

DESCRIPTION
ARCHITECTURAL DETAILS

SHEET
SD2

19 DOOR THRESHOLD

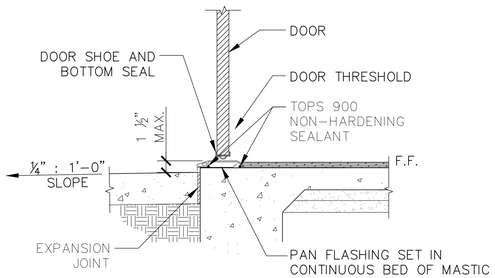

20 STRAPPING AT OPENING

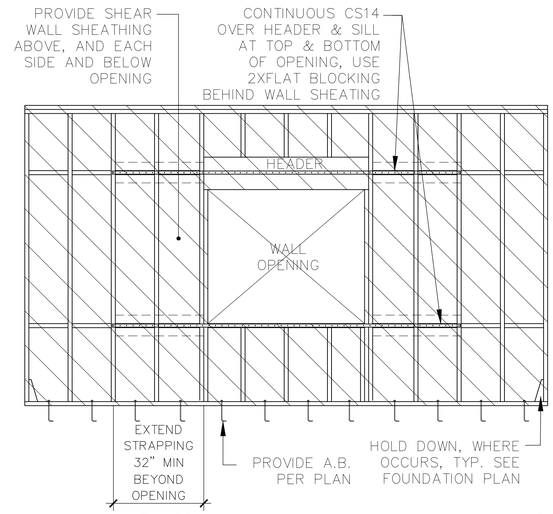

NOTE: USE (20) 0.148"x2 ½" FASTENERS AT EACH END OF STRAP AND 4" O.C. AT TOP AND BOTTOM OF OPENING

21 TYPICAL HOLD DOWN

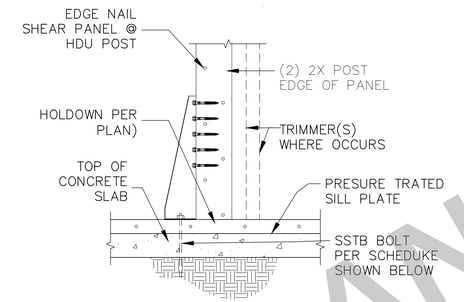

MARK	POST MIN	NUMBER OF SDS2.5 TO POST	BOLT IN NEW FOOTING	MIN EMBEDMENT
HDU2	(2) 2X	6	SSTB20	17"
HDU4	(2) 2X	10	SSTB24	24"

NOTE:
1. MINIMUM DISTANCE FROM THE CENTER OF ANCHOR ROD TO THE EDGE OF THE CONCRETE FOOTING SHALL BE 1 3/4"
2. DEEPEN FOOTINGS AS REQUIRED FOR 3" COVER AT ANCHORS.
3. MINIMUM EMBEDMENT IS MEASURED FROM TOP OF CONCRETE SLAB
4. SSTB PROJECTION ABOVE TOP OF CONCRETE SLAB SHALL BE 5"

22 WALL PENETRATION FLASHING

NOTES: SECTION 1403.2 C.B.C. CALLS FOR FLASHING OF ALL EXTERIOR OPENINGS EXPOSED TO WEATHER TO MAKE THEM WEATHERPROOF. THIS IS OUR RECOMMENDED PROCEDURE FOR STANDARD FLASHING AT OPENINGS IN WOOD FRAMED EXTERIOR WALLS WHERE THE EXTERIOR WALL FINISH IS APPLIED OVER BUILDING PAPER OR FELT. USE "MOISTOP" FLASHING OR EQUAL WHENEVER POSSIBLE FOR FLASHING MATERIAL. CAULK BACK OF WINDOW FRAMES BEFORE SETTING. USE WINDOWS THAT ARE WATERTIGHT.

THE WIDTH OF FLASHING MATERIAL SHALL PROVIDE FOR A MINIMUM LAP OF 6" AT VERTICAL AND 2" AT HORIZONTAL JOINTS AND OVERLAPS WITH OTHER WEATHER RESISTANT MATERIALS.

LINE-WIRE, WHEN USE AS BACKING TO SUPPORT BUILDING PAPER BENEATH WIRE LATH FOR STUCCO, SHOULD BE INSTALLED ACCORDING TO INDUSTRY STANDARDS AND PRACTICE. NO ATTACHMENT DEVICE NOR THE WIRE BACKING SHOULD COVER OR PENETRATE FLASHING MATERIAL. PERIPHERAL FLASHING AT ALL EDGES OF WALL OPENING MUST COVER THE WIRE BACKING.

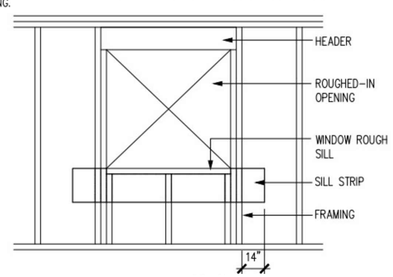

ATTACH SILL STRIP OF FLASHING MATERIAL AT LEAST 12" WIDE WITH THE TOP EDGE ALIGNED WITH THE TOP EDGE OF THE ROUGH SILL. EXTEND THIS SILL STRIP AT LEAST 14" BEYOND THE EDGE OF THE ROUGH OPENING FOR WINDOW, 2" BEYOND THE JAMB STRIP. ATTACH FLASHING WITH CORROSION RESISTANT NAILS OR RUST-RESISTANT STAPLES. (VERIFY WIDTH OF FLASHING MATERIAL TO ALLOW FOR MINIMUM LAPS AT EXPOSED WOOD TRIM CONDITIONS.)

23 WALL PENETRATION FLASHING

AFTER SILL STRIP IS IN PLACE, ATTACH JAMB STRIP AT LEAST 12" WIDE WITH INSIDE EDGE OF FLASHING ALIGNED WITH EDGE OF WINDOW OPENING. START JAMB STRIPS 2" BELOW THE SILL STRIP AND EXTEND JAMB STRIPS 12" ABOVE THE LOWER EDGE OF THE HEADER, TOP OF WINDOW OPENING.
(VERIFY WIDTH OF FLASHING MATERIAL TO ALLOW FOR MINIMUM LAPS AT EXPOSED WOOD TRIM CONDITIONS.)

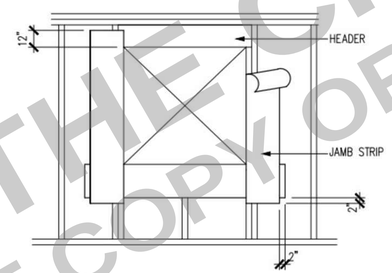

24 WALL PENETRATION FLASHING

APPLY A CONTINUOUS BEAD OF SEALANT TO THE BACK SURFACE OF THE WINDOW FLANGE. INSTALL WINDOW INTO ROUGH OPENING OVER SILL AND JAMB FLASHING STRIPS PER MANUFACTURER'S REQUIREMENTS. APPLY CONTINUOUS BEAD OF SEALANT TO THE FACE OF THE WINDOWS TOP FLANGE. ATTACH THE HEAD FLASHING OVER THE WINDOW FLANGE. THIS IS ANOTHER STRIP 12" WIDE WITH A 2" MINIMUM LAP BEYOND THE JAMB STRIPS.
(VERIFY WIDTH OF FLASHING MATERIAL TO ALLOW FOR MINIMUM LAPS AT EXPOSED WOOD TRIM CONDITIONS.)

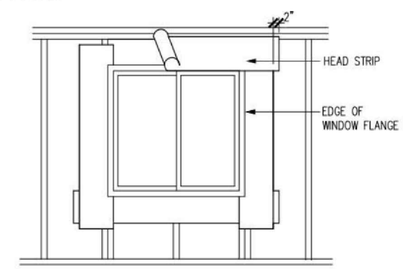

25 WALL PENETRATION FLASHING

STARTING AT THE BOTTOM OF THE WALL (SOLE PLATE), LAY BUILDING PAPER UNDER THE SILL STRIP. CUT AWAY ANY EXCESS BUILDING PAPER THAT MAY EXTEND ABOVE THE SILL FLANGE ON EACH SIDE OF THE OPENING. APPLY SUCCESSIVE LINES OF BUILDING PAPER OVER JAMB AND HEAD FLANGES , LAPPING EACH COURSE. PAPER SHOULD RUN CONTINUOUSLY OVER HEAD WITH NO SPLICES ABOVE WINDOW.

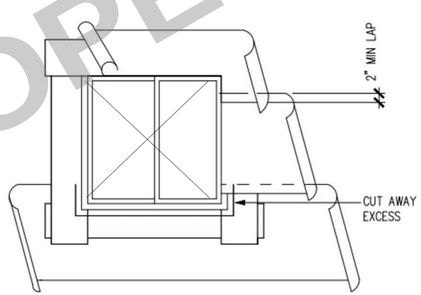

26 PATIO COVER POST TO FOOTING

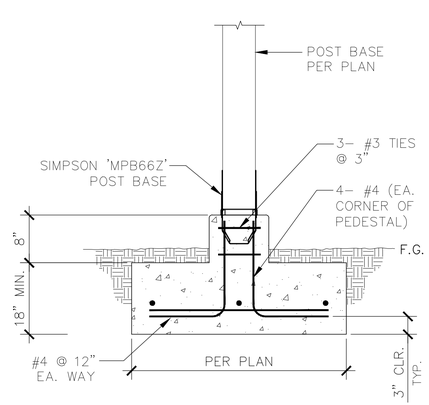

27 POCKET AT RIDGE BEAM / KING POST

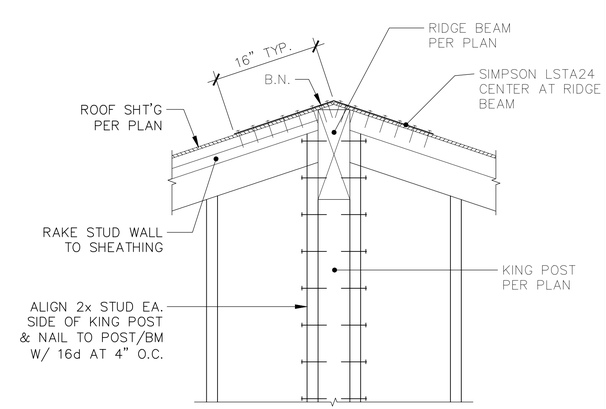

PROPERTY OF THE CITY OF UPLAND
DO NOT COPY OR ALTER

LAMFEI LIN BUILDERS
A PROFESSIONAL CORPORATION
970-546-2387
lflbuilders.com

PROJECT
PROJECT NAME

PROJECT ADDRESS

CITY OF UPLAND CALIFORNIA

DISCLAIMER:

BY USING THESE PERMIT READY CONSTRUCTION DOCUMENTS, THE RECIPIENT ACKNOWLEDGES, ACCEPTS AND VOLUNTARILY AFFIRMS THE FOLLOWING CONDITIONS:

1. THE USE OF THIS INFORMATION IS RESTRICTED TO THE ORIGINAL PROJECT FOR WHICH IT WAS PREPARED FOR; THE PERMIT READY ACCESSORY DWELLING UNIT (ADU) PROGRAM FOR THE CITY OF UPLAND ONLY. THIS IS A LIMITED SET OF STANDARDIZED ADU PLANS AND SPECIFICATIONS APPROVED BY THE CITY OF UPLAND BUILDING DEPARTMENT. BUILDING CODES DO CHANGE OVER TIME AND THE RECIPIENT SHALL ENSURE FULL COMPLIANCE UNDER ALL CODES THEN IN EFFECT AT THE TIME OF THE SUBJECT PERMIT. THIS DOES NOT ELIMINATE OR REDUCE THE RECIPIENT'S RESPONSIBILITY TO VERIFY ANY AND ALL INFORMATION RELEVANT TO THE RECIPIENT'S WORK AND RESPONSIBILITY ON THIS PROJECT. LAMFELI LIN BUILDERS SHALL NOT BE RESPONSIBLE FOR TRANSLATION ERRORS. DO NOT USE THESE CONSTRUCTION DOCUMENTS IF THE PERMIT HAS EXPIRED OR IS REVOKED AT ALL.

2. THE RECIPIENT RECOGNIZES AND ACKNOWLEDGES THAT THE USE OF THIS INFORMATION WILL BE AT THEIR SOLE RISK AND WITHOUT ANY LIABILITY OR LEGAL EXPOSURE TO LAMFELI LIN BUILDERS. NO WARRANTIES OF ANY NATURE, WHETHER EXPRESS OR IMPLIED, SHALL BE ATTACHED TO THESE DOCUMENTS AND THE INFORMATION CONTAINED THEREON. ANY USE, REUSE, OR ALTERATION OF THESE DOCUMENTS BY THE RECIPIENT OR BY OTHERS WILL BE AT THE RECIPIENT'S RISK AND FULL LEGAL RESPONSIBILITY. FURTHERMORE, THE RECIPIENT WILL, TO THE FULLEST EXTENT PERMITTED BY LAW, DEFEND, INDEMNIFY, AND HOLD LAMFELI LIN BUILDERS AND ITS ENGINEER HARMLESS FROM ANY AND ALL CLAIMS, SUITS, LIABILITY, DEMANDS, JUDGEMENTS, OR CONDITIONS ARISING OUT OF OR RESULTING THEREFROM ANY USE OF THESE CONSTRUCTION DOCUMENTS FOR OR ON ACCOUNT OF ANY INJURY, DEATH, DAMAGE OR LOSS TO PERSONS OR PROPERTY, INDIRECT OR CONSEQUENTIAL DAMAGES IN ANY AMOUNT. THIS INDEMNITY DOES NOT APPLY TO THE SOLE NEGLIGENCE OR WILLFUL MISCONDUCT OF LAMFELI LIN BUILDERS OR ITS ENGINEER.

3. THE DESIGN REPRESENTED BY THESE PLANS ARE COPYRIGHTED AND ARE SUBJECT TO COPYRIGHT PROTECTION.

4. IF THE RECIPIENT DOES NOT AGREE WITH THE ABOVE CONDITIONS, DO NOT PROCEED WITH THE CONSTRUCTION OF AN ADU OR OTHER IMPROVEMENT UNDER THESE PLANS AT ALL.

OWNER
SCALE
PROJECT NO.
DATE

STYLE

DESCRIPTION
ARCHITECTURAL DETAILS

SHEET
SD3